Improve efficiency and reliability

with SKF and Lincoln automatic lubrication systems for the machine tool industry

The Power of Knowledge Engineering

SKF products, systems and application knowledge help machine tools run faster, longer and cleaner. Our lubrication solutions support improved reliability and efficiency over the total asset life cycle, while improving the environmental performance of machining operations.

SKF and Lincoln have joined forces to provide the world's most complete portfolio of lubrication solutions, from manual lubricators to the most advanced centralized and automatic lubrication systems on the market. Together, we provide a full range of lubrication tools and expert services, from turnkey design and installation to testing and training.

Drawing on more than 200 years of combined friction management experience, we can help you improve machine reliability, reduce maintenance costs, improve productivity, enhance safety and optimize manpower resources.

Two leading brands. One global resource.

Leveraging our combined knowledge of lubrication

Why choose SKF and Lincoln lubrication systems? In a word, experience. We have drawn upon our combined knowledge of lubrication to develop efficient automatic lubrication systems tailored specifically for the requirements of machine tools.

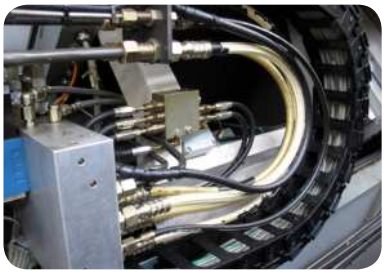

Utilizing our expertise in bearings, seals, mechatronics and lubrication systems, SKF provides complete solutions to increase productivity, reduce unplanned downtime and extend machine service life, as well as minimize energy use and costs.

We provide high-quality components and intelligent system solutions for cutting and forming machines, as well as related processes such as transport, assembly and automation. With the combination of SKF and Lincoln lubrication portfolios and capabilities, you now have one go-to resource for best-in-class lubrication services and advanced automatic lubrication systems. Representing both brands, SKF local distributors maintain a broad lubrication product offering and are prepared to provide installation or service as needed. In addition, local market specialists are available to share expertise and support based on specific applications.

Smooth integration from the very start

As a supplier to the machine tool industry for decades and a user of machine tools in more than 130 SKF factories worldwide, we have a unique understanding of industry challenges. Our products, systems and application knowledge can help both machine tool manufacturers and operators to optimize machine performance reliability and efficiency.

At SKF, service begins as soon as the project does. Our engineers work with state-of-the-art tools so you can integrate 3-D CAD data directly into your system plans. We support your maintenance staff by providing comprehensive lubrication training – on-site or at our location – that is tailored to your requirements. Also, we can install and perform system maintenance at your site.

SKF and Lincoln – A powerful formula for reliability:

- **Superior product innovation:**
  The broadest and most advanced lubrication offering in the industry
- **Unequalled global support:**
  Two teams of lubrication experts join forces
- **World-class installation support:**
  The combined expertise to install the right solution

To explore our solutions, visit **skf.com/TheFormula**

A complete portfolio of lubrication solutions to improve system reliability

Components used in the machinery industry increasingly are designed for continuous loads at the limits of materials and technology. Therefore, precise, demand-based lubrication is becoming more important. SKF provides optimum solutions that meet both your technology and cost requirements. SKF and Lincoln automatic lubrication systems deliver the exact quantity of the appropriate lubricant to the right place at the right time while the equipment is running.

We provide a range of solutions from manual to automatic lubrication for bearings, linear drives and spindles, as well as minimal quantity lubrication for cutting processes and coolant pumps. Advantages of these solutions include increased productivity, reduced total cost of ownership and a healthier, more environmentally friendly workplace.

SKF also can assist you in optimizing lubrication settings and intervals and in developing a customized lubrication programme.

SKF offers a complete product portfolio of manual lubrication tools and the industry's most advanced automatic lubrication systems.

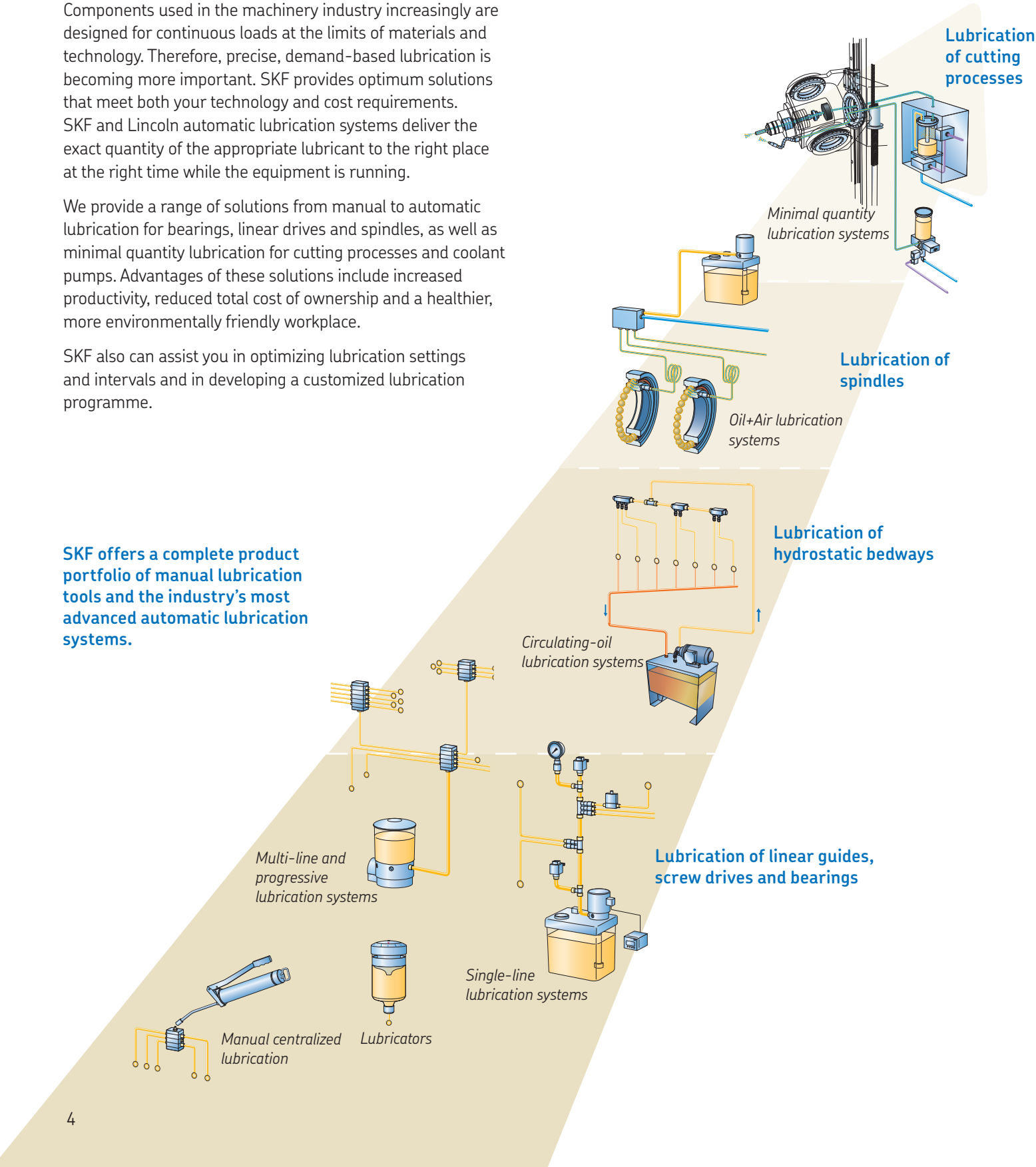

Maximize efficiency, minimize maintenance, reduce energy consumption

Automatic lubrication provides numerous advantages

Precise automatic lubrication provides a significant benefit for operators. Reliably delivering lubricant from a central source to all connected friction points, SKF and Lincoln automatic lubrication systems help prevent bearing damage and unscheduled equipment downtime.

Once installed, our automatic lubrication systems operate virtually maintenance free, reducing the total cost of production and operation. Also, automatic lubrication can minimize lubricant consumption and is much cleaner than manual lubrication, resulting in less lubricant to affect the environment.

Improve ecological and economic efficiency with minimal quantity lubrication

Machine operators can reduce production costs significantly by using SKF minimal quantity lubrication systems (MQL). These systems provide longer tool life and improved production quality due to more precise surface machining. Because MQL systems do not require cooling lubricant, the cost of that lubricant, its associated lubricant filters, preparation systems and disposal is eliminated. Also workpieces and chippings do not need to be cleaned.

Operational benefits

- **Increases reliability**
- **Reduces unplanned downtime**
- **Improves profitability**

Maintenance benefits

- **Reduces repair costs**
- **Extends maintenance intervals**
- **Eliminates over- and under-lubrication**

Safety benefits

- **Increases worker safety by eliminating manual lubrication of difficult-to-access points**
- **Reduces risk of slips and falls when compared to manual lubrication**
- **Reduces healthy impact of exhausted air[1, 2]**

Environmental benefits

- **Reduces energy consumption through reduced friction**
- **Reduces CO_2 emissions and water consumption[1]**
- **Reduces environmental impact due to more efficient use of lubricants**

1 Relevant for MQL, compared with wet machining
2 Reffering to research result by "Berufsgenossenschaft" (German Employer's Liability Insurance Association)

Solutions for challenging applications

SKF can provide lubrication solutions for virtually every application, including customized solutions for optimum function and efficiency. Our lubrication solutions protect machine tool bearings, linear guides, bedways, spindles, tools and workpieces from contamination or heat, helping to prevent unplanned downtime and increase machine availability.

Keep machines running

Machine tool performance plays a critical role in production efficiency and product quality. Today's machine tool customers are looking for manufacturers that can meet their production demands. High speed and precision is essential to be competitive in a global market.

Demand is equally high for machines and components that are more reliable and energy efficient. Operators want low-maintenance products with low environmental impact – and even lower operating costs. Profitability depends on it.

SKF offers the right lubrication solution for each lubricant, based on the application - from powerful handheld lubrication tools to advanced automatic lubrication systems. We also provide fluid pumps for machining processes and lubrication systems for hydrostatic bedways, chains, presses and assembly processes.

SKF application engineering can assist you in choosing the best solution for your application.

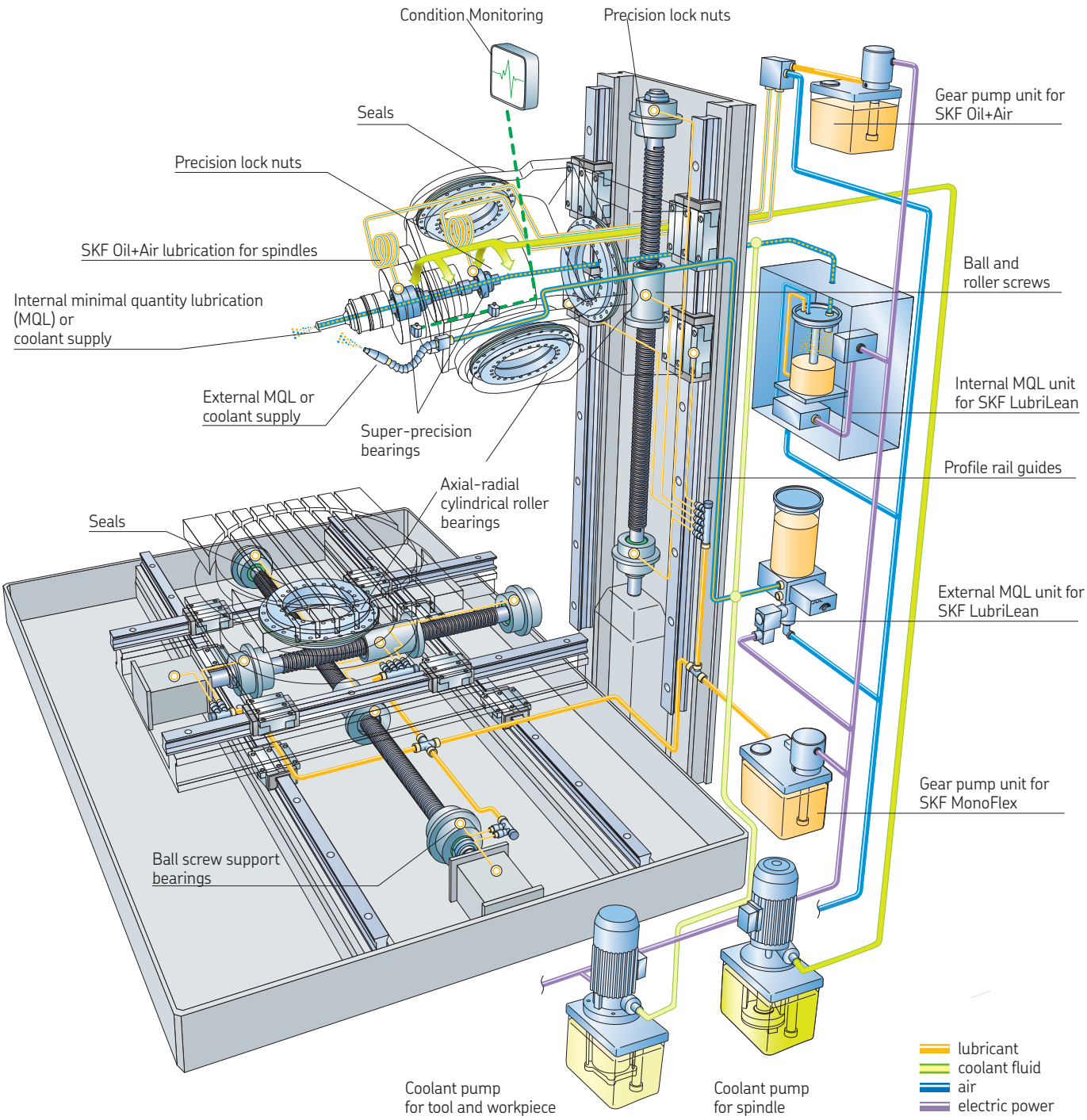
Condition Monitoring
Precision lock nuts
Seals
Precision lock nuts
SKF Oil+Air lubrication for spindles
Internal minimal quantity lubrication (MQL) or coolant supply
External MQL or coolant supply
Super-precision bearings
Gear pump unit for SKF Oil+Air
Ball and roller screws
Internal MQL unit for SKF LubriLean
Profile rail guides
Axial-radial cylindrical roller bearings
Seals
External MQL unit for SKF LubriLean
Gear pump unit for SKF MonoFlex
Ball screw support bearings
Coolant pump for tool and workpiece
Coolant pump for spindle
lubricant
coolant fluid
air
electric power

Total loss centralized, automatic lubrication of bearings and linear guides

For lubrication using oil or fluid grease, a single-line automatic lubrication system, such as SKF MonoFlex, is well suited. The range covers every type of drive – from manually actuated pumps to hydraulically, pneumatically or electrically operated systems. Also, different types of metering devices are available: multi-point devices to be built into the main line, single-point devices which are mounted on manifolds and single metering units which are screwed directly into the lubrication points.

Advantages:

- **Scalable system planning due to modular design**
- **Easy system expansion**

Features:

- **Lubricants: oil and fluid grease**
- **System pressures: 16–315 bar (*232–4 568 psi*)**
- **Delivery volumes: 0,01–1,5 cm³/Hub (*0.0006–0.09 in.³/stroke*)**

In a progressive automatic lubrication system, a piston pump supplies a defined amount of lubricant through the main line to the metering device that serves each outlet. Each SKF ProFlex and Lincoln Quicklub system is designed for a specific application and can be configured to meet the unique lubrication requirements of every lubrication point on the machine. Progressive automatic lubrication systems are suitable for oil and greases up to NLGI 2.

Advantages:

- **Intermittent delivery of lubricant**
- **Easy system monitoring**

Features:

- **Lubricants: oil and grease up to NLGI 2**
- **System pressures: 80–350 bar (*1 160–5 070 psi*)**
- **Delivery volumes: 0.7–5 cm³/min (*0.04–0.31 in.³/min*)**

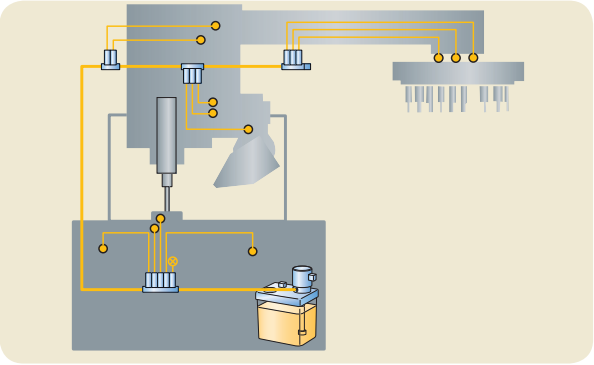

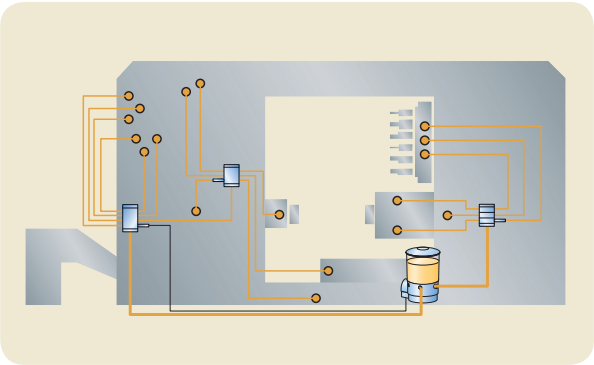

Circulating oil lubrication of bearings

Gearboxes and heavy loaded bearings need special attention, they need efficient lubrication and temperature reduction at the same time. The solution is a circulating oil lubrication system that lubricates, reduces heat and separates dirt particles, air bubbles and water from the oil.

These customer-specific solutions are compact units in a pump-cooler arrangement that supply the lubrication points with the right amount of tempered lubricating oil. A pressurized oil system transports the lubricant to the individually adjustable flow meters. Durable materials help ensure that even difficult ambient conditions have no negative effect on the system's functionality.

Actual delivery rates can be monitored visually or electronically, and multiple warning levels are available for condition-based maintenance. SKF CircOil systems are offered in a wide range of tailored and ready-to-use solutions.

Advantages:

- **Efficient cooling and lubrication**
- **Water and air separation**
- **Demand-based distribution of lubricant which can be monitored**

Features:

- **Delivery volumes: 0,05–50 l/min *(3.6–3 050 in.^{3}/min)***
- **Maximum pressure: 3–200 bar *(43.5–2 900 psi)***
- **Maximum viscosity: 250–2 000 mm^2/s**

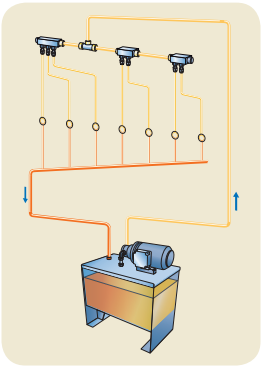

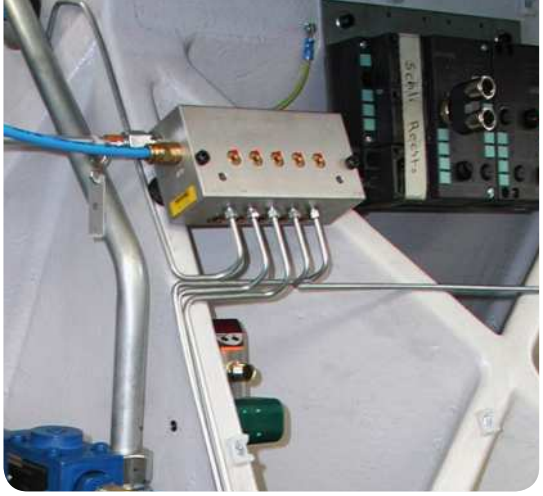

Automatic lubrication of spindle bearings

The required long-term performance of spindle bearings can be realized with a well-designed lubrication solution. SKF offers a variety of lubrication solutions for different spindle speeds, from small devices for grease relubrication to high efficient oil+air lubrication systems.

The lubricant provides a microscopic thin film between the rolling elements:

- **To prevent abrasion and skidding**
- **To protect surfaces from corrosion**
- **To protect the contact area from particle contamination.**

Advantages:

- **Better machining performance**
- **Higher dependability**
- **Less lubricant consumption**

For lower speeds, grease lubrication is the preferred option. SKF offers ETPC relubrication cartridges that can be integrated directly into the spindle, as well as the SKF Compact Greaser ETPx for these applications.

For tool spindles designed for high efficiency and long service life, we developed SKF Oil+Air lubrication systems. These systems provide a continuous, finely metered flow of oil that can be tailored to operating conditions by changing the metered quantity and the cycle. Also the technical alternative Oil Micron provides cooling effects to the lubrication points.

Features:

- **Grease output volume:**
  - ETPC: 6 mm^3/stroke (*$3.66x10^{-4}$ in.^{3}/stroke*)
  - ETPx: 10–20 mm^3/stroke (*$6.1x10^{-4}$–$12.2x10^{-4}$ in.^{3}/stroke*)
- **Oil deliver rate:**
  - Oil+Air: 10–160 mm^3/stroke (*$6.1x10^{-4}$–$97.6x10^{-4}$ in.^{3}/stroke*)
  - Oil Micron: 50 mm^3/stroke (*$30x10^{-4}$ in.^{3}/stroke*)

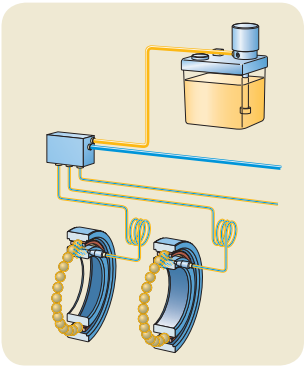

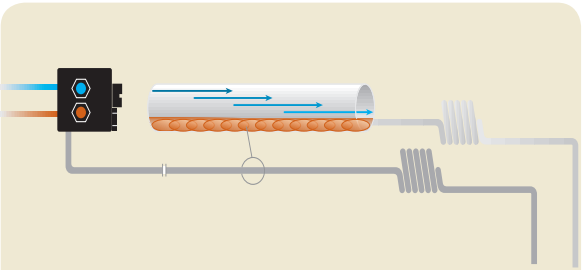

SKF Oil+Air: a metered quantity of oil is drawn into streaks in a lubrication line by a continuous air flow.

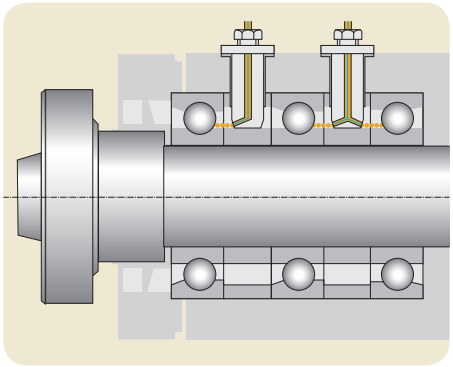

Lubrication of hydrostatic bedways

Optimum machining precision is obtained on machine tools with hydrostatic bearings. In hydrostatic lubrication, the pressure for separation of the friction surfaces builds up outside the surfaces' contact zone. Friction surfaces are separate from each other while they are at rest. As a result, the low friction coefficients of fluids already take effect when motion begins, and they do so at very low sliding velocities.

SKF oil lubrication systems with multi-circuit pumps, like the pump series ZM, supply hydrostatic bearings with the necessary amount of oil and pressure.

These systems provide protection against overloads without the sliding surfaces coming into contact with each other because the recess pressure can rise to the maximum pump pressure without the pump being overloaded. The delivery rate per recess is nearly independent of the viscosity and pressure. This system is very efficient because the pump's output is not converted into heat by restrictors.

Advantages:

- **High rigidity and damping**
- **Minimizes wear on sliding surfaces**
- **Very high positioning and machining accuracy**
- **High speeds with low friction**

Features:

- **Permissible operating viscosity range: 20 to 1 000 mm²/s**
- **Number of outlets: 1, 2, 4, 5, 8, 10, 20**
- **Output per outlet: 0,01–0,45 l/min *(0.61–27.46 in.³/min)***
- **Back pressure: 20–50 bar *(290–725 psi)***

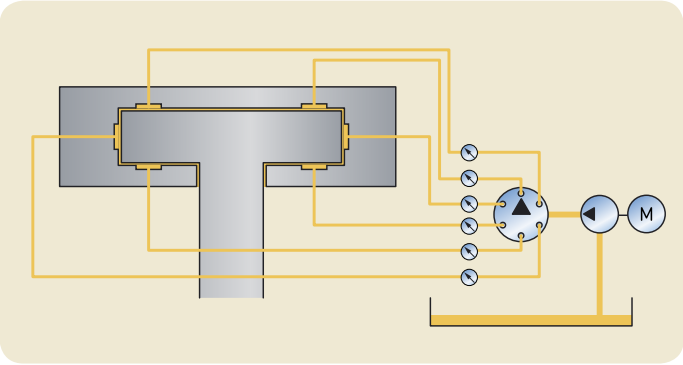

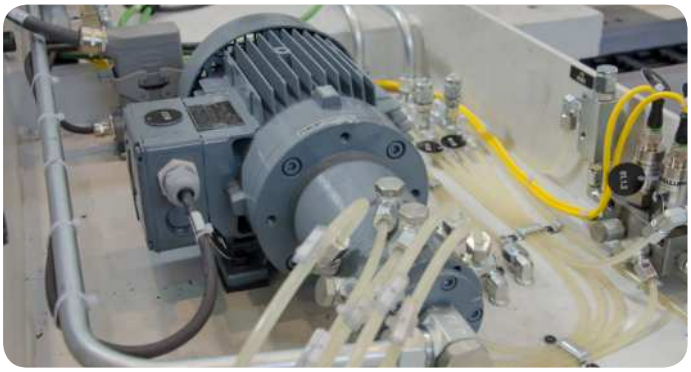

Coolant pumps for machine tools and filter systems

SKF coolant pumps are used in machine tools and filter systems for a wide range of tasks: from lift pumps in very dirty fluids to high-pressure pumps that feed the fluid back to the machining process.

In addition to supplying lubricant to the tool and work piece during the production process, SKF coolant pumps also offer solutions for centralized supply, as well as for disposal and preparation.

Advantages:

- **Sealless design up to 25 bar (*363 psi*)**
- **High operational safety**
- **Low maintenance requirements**
- **Quiet running**
- **Flexible immersion depths, also with pipe extension**
- **Simple, quick installation and commissioning**

From standard to unique, customer-specific solutions, SKF supplies centrifugal and screw pumps with delivery pressures up to 120 bar (*1 740 psi*). These easy-to-use immersion pumps are installed directly in the coolant reservoir and are available in numerous designs for various pumped media, delivery rates and delivery heads.

The pumps are offered with various drive options, from standard motors according to DIN EN 60034 through to protection class EExd. Furthermore, the immersion pumps can be supplied with all standard electrical ratings used around the world.

In addition, a motor with an integrated frequency converter can be offered. Pumps that have integrated frequency converters achieve energy savings as high as 70 % and have a prolonged service life because less heat is transferred to the coolant, and the result is a reduction in the cooling performance required.

Features:

- **Delivery rate: Q_{max} = 1 250 l/min (*330 gal/min*)**
- **Delivery pressure: P_{max} = 120 bar (*1 740 psi*)**
- **Temperature range: –100 to +170 °C (*–148 to +338 °F*)**

This offer is part of the SKF BeyondZero portfolio of products, services and solutions designed to help our customers reduce environmental impact.

To learn more, visit **skf.com/beyondzero**.

Lower energy consumption and higher productivity

When performing cutting operations, minimal quantity lubrication (MQL) eliminates the need for complicated wet machining. The principle is simple - lubricant is applied to the tool's cutting edge as an aerosol in the exact amount required. Using MQL, lubricant consumption is measured in millilitres per hour instead of litres per minute.

Alternating use of wet and dry machining on one machine is easy to implement with SKF LubriLean. In addition to integration in new machine tools, low-maintenance MQL devices can be used to retrofit most existing machinery.

Featuring SKF LubriLean and Vectolub, we offer a complete range of technology for both internal and external MQL. Internal MQL solutions transport the aerosol internally through the tool holder and tool, while external MQL solutions use external lines and nozzles to feed the aerosol.

On most advanced internal lubrication systems, the aerosol quantity can be set by your machine tool's PLC – an efficient solution for machining and turning centres. When the tool shape or length is changed, there is no need for time-consuming readjustment of the nozzles to make the aerosol reach the lubrication point.

Advantages*

- **Extends the service life of the cutting tool**
- **Increases productivity with higher cutting speed**
- **Reduces maintenance costs**
- **Enables better machining surface and quality**
- **Reduces energy consumption and CO_2 emissions**

* Compared to a traditional cooling system

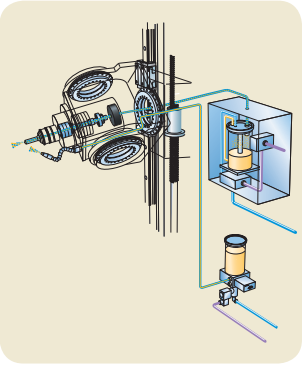

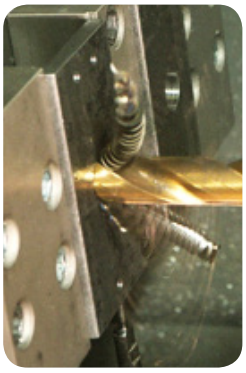

Meet a wide range of challenges

Machine tools used in component manufacturing must meet high demand for productivity and efficiency. Whether lubricating machine tools involved in cutting, forming and casting, or supplying lubricant to robots in automotive body construction, SKF has the right solution to optimize service life and reliability of your system. Also SKF has developed products specifically for use in volatile atmospheres, such as automotive painting lines.

Example:
Metal-forming machinery (presses)

Bearings and gear boxes of presses need to be supplied with a predefined, constant and reliable oil flow. For this application, SKF recommends oil circulating lubrication systems supported by flow limiters and modular progressive metering devices.

SMB flow limiters **(1)** divide the volumetric oil flow of the main line into parallel, individual volumetric flow quantities, limit these according to requirements and keep them constant. Signal transmitters or piston detectors can be used to effectively monitor the volume flow. Flow limiters also can be used to directly lubricate gear boxes.

PSG modular progressive metering devices **(2)** are available in three sizes ranging from 0,8 to 6 l/min *(49 to 366 in.³/min)*. These devices provide the appropriate amount of oil to meet the individual needs of your press components. With the help of directional solenoid valves individual press parts can be connected to the lubrication system only when lubrication is needed.

The combination of SMB flow limiters and PSG modular progressive metering devices help to ensure a constant oil flow to keep your press operating efficiently.

Advantages:

- **Reliable and precise lubrication**
- **Cooling and cleaning effect**
- **Easy to adjust and to maintain**
- **Wide range of components to meet the needs of the press**

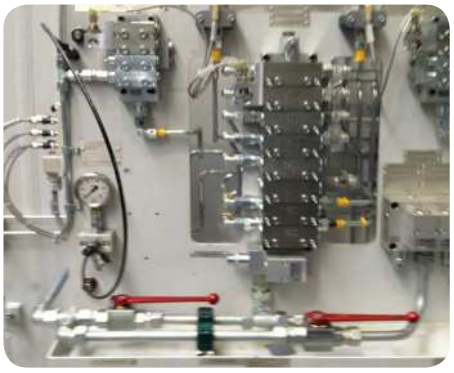

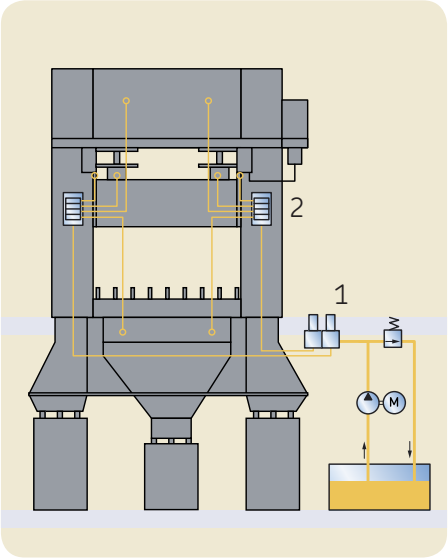

Example:
Lubrication to support assembly processes

When it comes to assembly processes, line efficiency is key. Automatic lubrication systems eliminate production downtime for lubrication tasks. SKF offers a complete product line of injection oilers and micro-metering devices for these applications.

SKF Dosalub metering systems provide reliable and precise lubrication. These systems are available with three different metering unit designs, including rotating nozzles, and can handle a variety of lubricants. SKF Dosalub systems help to reduce labour costs for manual lubrication and to increase productivity of the assembly lines.

Advantages:

- **Reliable and precise lubrication**
- **Increase productivity of the assembly lines**
- **Reduce labour cost**

Example:
Lubrication of chains

Chains are exposed to high load and wear due to permanent movement. The surface between the pin and bushing is the primary wear point on a chain, and the roller and bushing need attention. Both can be lubricated continuously with Lincoln ORSCO oil and air lubrication system.

ORSCO systems use compressed air as a catalyst to deliver lubricant that penetrates deeper and more effectively than conventional drip and brush methods. The low-pressure air forces the lubricant into the critical wear points and simultaneously provides a cleaning effect, which removes debris and contaminants from the chain. These lubrication systems help to reduce lubricant consumption rates significantly.

In addition, our portfolio includes a broad variety of solutions for any required way to lubricate chains, regardless of the need for oil or grease.

Advantages:

- **Reliable lubrication and cleaning effect**
- **Reduces process down time**
- **Reduces lubricant consumption rates**

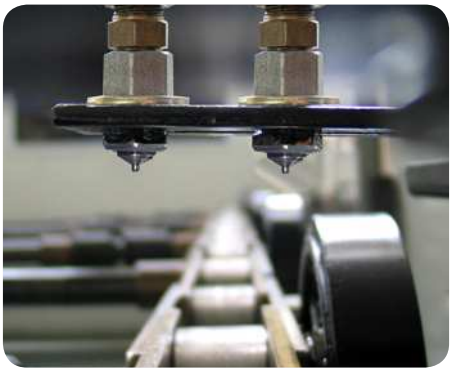

Comprehensive range of lubrication components

SKF offers a comprehensive range of high-quality lubrication pumps, metering devices, control and monitoring units and all necessary accessories for your specific lubrication solution.

Lubrication pumps

Certain criteria, such as ambient conditions, required delivery rates, lubricant used and service intervals, determine which lubrication pump should be selected. These pumps are available with varying control and monitoring options.

SKF's portfolio includes mechanically, electrically, hydraulically and pneumatically driven pumps. Operating efficiently in low working temperatures, these pumps are suitable for oil and standard greases up to NLGI Grade 2.

Our offering ranges from single-point automatic lubricators and pump units with integrated reservoirs for progressive, single- or multi-line lubrication systems to tailored pumps for circulating oil systems, as well as units utilized for MQL or Oil+Air applications.

Lubricant metering devices

Depending on the type of lubrication system selected, specific metering devices are required. All metering devices feature high-precision components and are available in versions suitable for various pressures. System operation can be verified easily through electronic or visual monitoring.

The SKF offering is completed by additional system components including spray nozzles and brushes.

Oil lubrication components, including MQL, Oil+Air and chain lubrication units

Monitoring

Monitoring and control are essential to the efficient operation of a lubrication system. When installed in conjunction with intelligent monitoring devices, an automatic lubrication system can facilitate economical and optimal lubrication.

With the instruments we provide, you have access to all values important for controlling your system – temperature, pressure, volumetric flow or fill level – whether through visual monitoring or by utilizing digital or analog signals.

Approved in equipment specifications

Thanks to our industry-specific application expertise and more than half a century of experience in the automotive industry, we are able to offer lubrication systems for high-performance applications.

SKF automatic lubrication products are approved worldwide in the equipment specifications and component lists of leading automobile manufacturers.

Grease lubrication components

Service solutions from SKF

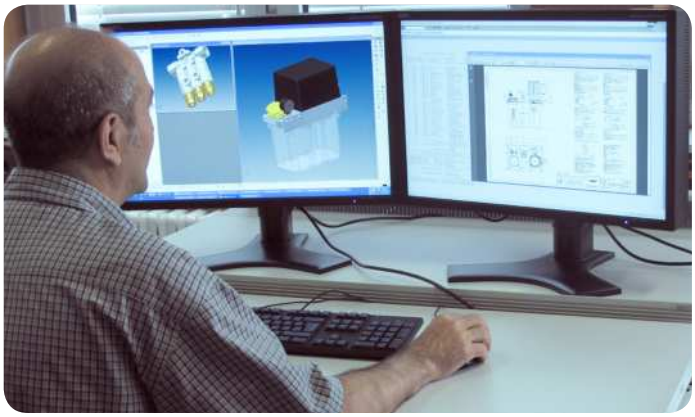

Design in 3-D and electronic CAD product catalog

3-D CAD data is available in native format in the online product catalog, which is based on the eCATALOGsolutions technology by CADENAS GmbH. You can configure your products online from the centralized lubrication area and integrate them into your design process free of charge. You can integrate the CAD data seamlessly into your layout plans. The SKF LubCAD app allows you to use the SKF CAD download portal for lubrication systems with its full functionality for your mobile devices.

Access our online catalogue at
http://skf-lubrication.partcommunity.com

Retrofitting centralized lubrication systems

Maintenance and repair costs during system downtime quickly can become unwieldy. That is why we offer on-site professional retrofitting of centralized lubrication systems at your location. We also can assume responsibility for maintenance and repair during ongoing operations.

In addition, our portfolio includes other solutions that can simplify maintenance for you, from an electric refilling pump that has been optimized for the conditions inside machining operations to appropriate fittings and accessories.

Procurement logistics and synchronized production

SKF can tailor our logistics processes to the requirements of our customers. For example, using synchronized electronic KANBAN systems with first-in, first-out logistics, we enable an inventory-free supply for manufacturing and assembly that is synchronized with production.

As a result, run-through times and total outlays are improved, and the risk of loss and damage is reduced. This results in optimum supply chain management, whether your needs are exclusively local or global.

Global experience, global support

More than 200 years of combined SKF and Lincoln experience

SKF has been involved in the machine tool industry since its inception and offers deep knowledge of the complicated mechanical interrelationships inherent in ever-changing technology. By uniting the worldwide experience, portfolios and distribution networks of the SKF and Lincoln brands, we offer the industry's most complete range of lubrication management solutions across the globe.

Whatever the size or design of your plant, SKF has the products and resources to help you increase bearing life, machine uptime and safety, while minimizing manpower hours, maintenance costs and environmental impact.

A network of experienced partners

SKF- and Lincoln-branded products, systems and services are available through a global network of distributor partners, supported by one unified sales organization committed to your success. Systems house distributors around the world offer turnkey solutions and extensive aftermarket support. In addition to maintaining a local inventory of system components and spare parts, these factory-trained lubrication specialists can provide:

- **Customized lubrication system design**
- **System installation and start up**
- **Service and repair**
- **Lubrication analysis and testing**
- **Lubrication management training**
- **Warranty support**
- **System maintenance contracts**
- **Surveys and recommendations**
- **Return-on-investment (ROI) analysis**
- **Guidance on safety and environmental issues**
- **Pre-assembled lubrication kits for easy retrofitting**

Here for you, wherever you are

With lubrication application centres located on every continent and a worldwide distributor network, SKF has the people, products and support you need to optimize your lubrication management programme. For more information, contact your SKF representative or visit **skf.com/TheFormula**.

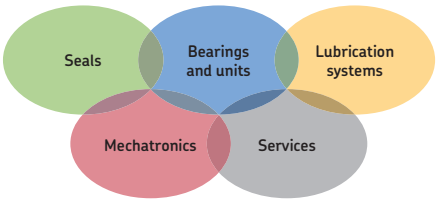

The Power of Knowledge Engineering
Combining products, people, and application-specific knowledge, SKF delivers innovative solutions to equipment manufacturers and production facilities in every major industry worldwide. Having expertise in multiple competence areas supports SKF Life Cycle Management, a proven approach to improving equipment reliability, optimizing operational and energy efficiency and reducing total cost of ownership.

These competence areas include bearings and units, seals, lubrication systems, mechatronics, and a wide range of services, from 3-D computer modelling to cloud-based condition monitoring and asset management services.

SKF's global footprint provides SKF customers with uniform quality standards and worldwide product availability. Our local presence provides direct access to the experience, knowledge and ingenuity of SKF people.

SKF BeyondZero is more than our climate strategy for a sustainable environment: it is our mantra; a way of thinking, innovating and acting.

For us, SKF BeyondZero means that we will reduce the negative environmental impact from our own operations and at the same time, increase the positive environmental contribution by offering our customers the SKF BeyondZero portfolio of products and services with enhanced environmental performance characteristics.

For inclusion in the SKF BeyondZero portfolio, a product, service or solution must deliver significant environmental benefits without serious environmental trade-offs.

PUB LS/S2 15455 EN · February 2015

This publication supersedes publication PUB LS/S2 12157 EN (1-2001-EN).

Certain image(s) used under license from Shutterstock.com

skf.com/TheFormula