Lubricant feed pump P203 for progressive systems

DC designs with M00-M23 or MS8-MS9 control circuit board

Date:	**11.12.2025**
Document no.:	**951-171-026-EN**
Version:	**05**

Read this manual before installing or commissioning the product and keep it at hand for later reference!

Original EC Declaration of Incorporation in accordance with Directive 2006/42/EC, Appendix II Part 1 B

The manufacturer hereby declares at its sole responsibility that the partly completed machinery conforms to the essential health and safety requirements of the Machinery Directive 2006/42/EC, Annex I, marked in the Annex to the EC Declaration of Incorporation as applicable and fulfilled at the time of placing on the market.
The special technical documents were prepared following Annex VII part B. Upon justifiable request, these special technical documents can be forwarded electronically to the respective national authorities. The authorized company for the compilation of the technical documentation is the manufacturer.

Designation:	Electrically operated pump for the feeding of lubricants in interval operation inside a centralized lubrication system
Type:	P203
Item number:	6440-xxxxxxxx /644-xxxxx-x / 94xxxxxx, 094xxxxxxx

Furthermore, the following directives and standards were applied in the respective applicable areas:
2006/42/EC: Machinery Directive
2011/65/EU: RoHS II
2014/30/EU: Electromagnetic Compatibility

EN ISO 12100:2010	EN 60204-1:2018	EN 61000-6-2:2005/AC:2005	EN 61000-6-4:2007/A1:2011
EN 61131-2:2007	EN 809:1998+A1:2009/AC:2010	EN 60034-1:2010/AC:2010	EN 60947-5-1:2017
EN IEC 60947-5-2:2020			
EN IEC 63000:2018			

The partly completed machinery must not be put into service until it has been established that the machinery into which it is to be incorporated is in compliance with the provisions of the Machinery Directive 2006/42/EC and all other applicable Directives.

Berlin, 23.10.2025
Richard Lindemann
Team Leader SE
Berlin

Martin Zverina
Factory Manager
Chodov

Manufacturer: SKF Lubrication Systems Germany GmbH, Motzener Straße 35/37, DE - 12277 Berlin

Original UK Declaration of incorporation according to the Supply of Machinery (Safety) Regulations 2008 No. 1597 Annex II

The manufacturer hereby declares under sole responsibility that the partly completed machinery complies with the essential health and safety requirements of UK legislation Supply of Machinery (Safety) Regulations 2008 No. 1597 Annex I, marked in the Annex to the EC Declaration of Incorporation as applicable and fulfilled at the time of placing on the market.
The special technical documents were prepared following Annex VII part B. Upon justifiable request, these special technical documents can be forwarded electronically to the respective national authorities. The authorized company for the compilation of the technical documentation is SKF (U.K.) Limited, 2 Canada Close, Banbury, Oxfordshire, OX16 2RT, GBR.

Designation:	Electrically operated pump for the feeding of lubricants in interval operation inside a centralized lubrication system
Type:	P203
Item number:	6440-xxxxxxxx /644-xxxxx-x / 94xxxxxx, 094xxxxxxx

Furthermore, the following regulations and standards were applied in the respective applicable areas:
Supply of Machinery (Safety) Regulations 2008 No. 1597
Electromagnetic Compatibility Ordinance 2016 No. 1091
The Restriction of the Use of Certain Hazardous Substances in Electrical and Electronic Equipment Regulations 2012 No. 3032

EN ISO 12100:2010	EN 60204-1:2018	EN 61000-6-2:2005/AC:2005	EN 61000-6-4:2007/A1:2011
EN 61131-2:2007	EN 809:1998+A1:2009/AC:2010	EN 60034-1:2010/AC:2010	EN 60947-5-1:2017
EN IEC 60947-5-2:2020			
EN IEC 63000:2018			

The partly completed machinery must not be put into service until it has been established that the machinery into which it is to be incorporated is in compliance with the provisions of UK legislation Supply of Machinery (Safety) Regulations 2008 No. 1597 and all other applicable Directives.

Berlin, 23.10.2025
Richard Lindemann
Team Leader SE
Berlin

Martin Zverina
Factory Manager
Chodov

Manufacturer: SKF Lubrication Systems Germany GmbH, Motzener Straße 35/37, DE - 12277 Berlin

Appendix to Declaration of Incorporation in accordance with 2006/42/EC, Annex II, No. 1 B
Description of the essential health and safety requirements according to 2006/42/EC, Annex I, which have been applied and fulfilled. Any essential health and safety requirements not listed here are not relevant to this product.

Table 1

Appendix to Declaration of Incorporation
Valid for P2x3 lubrication pumps

No.:	Essential health and safety requirement	Applicable:	Fulfilled:
1.1.1	Definitions	Yes	Yes
1.1.2	Principles of safety integration	Yes	Yes
1.1.3	Materials and products	Yes	Partially[1)]
1.1.5	Design of machinery to facilitate its handling	Yes	Yes
1.1.6	Ergonomics	Yes	Partially[2)]
1.2	Control systems	Yes	Yes
1.2.1	Safety and reliability of control systems	Yes	Yes
1.2.3	Starting	Yes	Yes
1.2.6	Failure of the power supply	Yes	Yes
1.3	Protection against mechanical hazards	Yes	Yes
1.3.1	Risk of loss of stability	Yes	Yes
1.3.2	Risk of break-up during operation	Yes	Partially[3)]
1.3.4	Risks due to surfaces, edges or angles	Yes	Yes
1.3.7	Risks related to moving parts	Yes	Yes
1.3.9	Risks of uncontrolled movements	Yes	Yes
1.5	Risks due to other hazards	Yes	Yes
1.5.1	Electricity supply	Yes	Yes
1.5.6	Fire	Yes	Yes
1.5.8	Noise	Yes	Yes
1.5.11	External radiation	Yes	Yes
1.5.13	Emissions of hazardous materials and substances	Yes	Yes
1.5.15	Risk of slipping, tripping, or falling	Yes	Yes
1.6	Servicing		
1.6.1	Machinery maintenance	Yes	Yes
1.6.2	Access to operating positions and servicing points	Yes	Partially[4)]
1.6.4	Operator interventions	Yes	Yes
1.7	Information	Yes	Yes
1.7.1	Information and warnings on the machinery	Yes	Yes
1.7.1.1	Information and information devices	Yes	Yes
1.7.2	Warning of residual risks	Yes	Yes
1.7.3	Marking of machinery	Yes	Yes
1.7.4	Operating instructions/assembly instructions	Yes	Yes
1.7.4.1	General principles for the drafting of operating instructions/assembly instructions	Yes	Yes
1.7.4.2	Contents of the operating instructions/assembly instructions	Yes	Yes
1.7.4.3	Sales literature	Yes	Yes

1) Not completely fulfilled: Hazards due to the lubricant used must be assessed by the operator on the basis of the Safety Data Sheet (SDS) and, if necessary, protective measures must be taken.
2) Not completely fulfilled: The operator must ensure that the pump is integrated into the higher-level machine in such a way that the pump can be operated and filled ergonomically.
3) Not completely fulfilled: The operator must protect the lubrication system against excessive pressure. For this purpose, a pressure limiting valve with max. 350 bar opening pressure must be provided on each pump element.
4) Not completely fulfilled: The operator must ensure that the pump is integrated into the higher-level machine in such a way that the pump can be operated without danger.

Masthead

Manufacturer
SKF Lubrication Systems Germany GmbH
Email: Lubrication-germany@skf.com
www.skf.com/lubrication

Berlin Plant
Motzener Strasse 35/37
12277 Berlin
Germany
Tel. +49 (0)30 72002-0
Fax +49 (0)30 72002-111

Walldorf Plant
Heinrich-Hertz-Strasse 2-8
69190 Walldorf, Germany
Germany
Tel.: +49 (0) 6227 33-0
Fax: +49 (0) 6227 33-259

Authorized local distributors
- Great Britain -
SKF (U.K.) Limited,
2 Canada Close, Banbury, Oxfordshire,
OX16 2RT, GBR.

- North America -
SKF Lubrication Business Unit
Lincoln Industrial
5148 North Hanley Road, St. Louis,
MO. 63134 USA

- South America -
SKF Argentina Pte. Roca 4145,
CP 2001 Rosario, Santa Fe

Warranty
The instructions contain no statements regarding the warranty or liability for defects. That information can be found in our General Terms of Payment and Delivery.

Training
We conduct detailed training in order to enable maximum safety and efficiency. We recommend taking advantage of this training. For further information, contact your authorized SKF dealer or the manufacturer.

Table of contents

Original EC Declaration of Incorporation in accordance with Directive 2006/42/EC, Appendix II Part 1 B 2
Original UK Declaration of incorporation according to the Supply of Machinery (Safety) Regulations 2008 No. 1597 Annex II 2
Masthead 4
Table of contents 5
Safety alerts, visual presentation, and layout 7

1 Safety instructions 8
1.1 General safety instructions 8
1.2 General electrical safety instructions 8
1.3 General behaviour when handling the product 8
1.4 Intended use 8
1.5 Persons authorized to use the product 9
1.6 Foreseeable misuse 9
1.7 Referenced documents 9
1.8 Prohibition of certain activities 9
1.9 Painting plastic components and seals 9
1.10 Safety markings on the product 10
1.11 Note on the type plate 10
1.12 Notes on CE marking 10
1.13 Note on Pressure Equipment Directive 10
1.14 Note on UKCA marking 10
1.15 Note on UL mark 10
1.16 Note on ECE mark 10
1.17 Notes on ADR certificate 10
1.18 Note on EAC marking 11
1.19 Note on China RoHS mark 11
1.20 Emergency shutdown 11
1.21 Assembly, maintenance, fault, repair 11
1.22 First start-up, daily start-up 11
1.23 Residual risks 12
2 Lubricants 13
2.1 General information 13
2.2 Material compatibility 13
2.3 Temperature properties 13
2.4 Aging of lubricants 13
2.5 Avoidance of faults and hazards 13
2.6 Solid lubricants 13
2.7 Chisel pastes 13
3 Overview, functional description 14
3.1 Pumps without a follower plate 14
3.2 Pumps with a follower plate 15
3.3 Display and control elements 15
3.3.1 Functional description of the control circuit board M00-M23 16
3.4 Pumps with an ultrasonic sensor 17
3.5 Electrical connections 17
3.6 Hydraulic connection diagrams 18
4 Technical data 19
4.1 General technical data 19
4.2 Weight of the empty pump 20
4.3 Electrical data 21
4.4 Nominal delivery rates 21
4.4.1 Influencing factors on the delivery rate 22
4.4.2 Delivery rate charts for typical NLGI 2 lubricants 22
4.5 Principle of operation of the intermittent low-level signal 23
4.6 Operational limits of the intermittent empty signal 24
4.7 Ultrasonic sensor 25
4.7.1 BIBO reservoir design 25
4.7.2 Switching points with BIBO reservoir design 27
4.7.3 BABO reservoir design 28
4.8 Reservoir designs 30
4.8.1 Reservoir designs 2-25 liters 30
4.8.2 Reservoir designs 25-60 liters 32
4.9 Usable reservoir volume 33
4.9.1 Usable reservoir volume for reservoirs without a follower plate (2 – 15 liters) 33
4.9.2 Usable reservoir volume for reservoirs with a follower plate (4 – 15 liters) 33
4.9.3 Usable reservoir volume for reservoirs with double-lip follower plate (4 – 25 liters) 33
4.9.4 Usable reservoir volume for Xx_G reservoirs (without a follower plate/ 30 - 60 liters) 34
4.9.5 Usable reservoir volume for XBxG reservoirs (with double-lip follower plate / 25 - 55 liters) 34
4.10 Lubricant volume when an empty pump is filled for the first time 35
4.11 Tightening torques 36
4.12 Type identification code 37
4.12.1 Basic parameters and reservoir design 37
4.12.2 Pump elements 39
4.12.3 Power supply and electrical connections 40
4.12.4 Control, lubricant, and additional specifications 41
4.13 Standard grease KF LGCC 2 42
5 Delivery, returns, storage 43
5.1 Delivery 43
5.2 Return shipment 43
5.3 Storage 43
5.4 Storage temperature range 43
5.5 Storage conditions for products filled with lubricant 43
5.5.1 Storage period up to 6 months 43
5.5.2 Storage period between 6 and 18 months 43
5.5.3 Storage period more than 18 months 43
5.6 Declaration of decontamination 43
6 Assembly 44
6.1 General safety instructions 44
6.2 Transporting the pumps 44
6.3 Mechanical connection 45
6.3.1 Minimum mounting dimensions 45
6.3.2 Assembly holes 47
6.3.3 Assembly holes for 15 l, 20 l, and 25 l reservoirs 48
6.3.4 Assembly holes for Xx_G and XBxG reservoirs (25-60 liter) 49
6.4 Electrical connection 50
6.5 Setting the delivery rate on pump element R 51
6.6 Installing the pressure limiting valve 52
6.7 Connection of the lubrication line 53
6.8 Filling with lubricant 53
6.8.1 Filling via the reservoir cover 53
6.8.2 Filling via filler nipple 54
6.8.3 Filling via the optional fill connection 54

6.8.4 Initial filling of an empty pump with follower plate....55
6.8.5 Initial filling of an empty pump with double-lip follower plate....56
6.9 Adjust the pause time....56
6.9.1 Modifying the default pause times using jumpers....57
6.10 Settings for control circuit board M00-M23....58
6.10.1 Factory settings of the jumpers for control circuit boards M00-M23....58
6.10.2 Possible settings of the pause times for control circuit board M00- M23....59
6.11 Settings for control circuit board MS8-MS9....60
6.11.1 Factory settings of the jumpers for control circuit board MS8-MS9....60
6.11.2 Possible settings of the pause times for control circuit board MS8- MS9....61
7 First start-up....62
7.1 Inspections before first start-up....62
7.2 Inspections during first start-up....62
8 Operation....63
8.1 Top up lubricant....63
8.2 Triggering additional lubrication....63
8.3 Resetting an error message....63
9 Maintenance....64
10 Cleaning....65
10.1 Basics....65
10.2 Interior cleaning....65
10.3 Exterior cleaning....65
10.3.1 Cleaning pumps with Xx_G and XBxG reservoir designs....65
11 Faults, causes, and remedies....66
11.1 Indication of operational and fault states by the LEDs on the control circuit board....67
11.1.1 Operating statuses with control circuit boards M00-M23 and MS8-MS9....67
11.1.2 Faults with control circuit boards M00-M23....68
11.1.3 Faults with control circuit board MS8- MS9 69
12 Repairs....70
12.1 Replacing pump element and pressure limiting valve....70
12.2 Replacing the control circuit board....71
12.2.1 Test run of the pump....71
13 Shutdown, disposal....72
13.1 Temporary shutdown....72
13.2 Permanent shutdown, disassembly....72
13.3 Disposal....72
14 Spare parts....73
14.1 Housing cover, complete....73
14.2 Pump elements....73
14.3 Pressure limiting valves and adapters....73
14.4 Adapter D6 AX 1/8NPT I C....74
14.5 Adapter with lubricant nipple....74
14.6 Plug screw M22x1.5....74
14.7 Motor 12 / 24 VDC....74
14.8 Replacement kit for control circuit board....75
14.9 Reed switch....75
14.10 Transparent reservoir....76
14.11 Fixed paddle....77
14.12 Reservoir cover....77
14.13 Screw cap....77
14.14 Connection sockets and cables....77
15 Appendix....78
15.1 Connection diagrams....78
15.1.1 Connection diagram of the signal line on the reservoir cover....79
15.1.2 Recommended contact protection for switching inductive loads....80
15.1.3 Overview of cables and possible connections....80
15.1.4 Terminal diagram for P203 VDC with control circuit board M00-M23....81
15.1.5 Terminal diagram for P203 VDC with control circuit board MS8-MS9....82
15.2 China RoHS Table....83

Safety alerts, visual presentation, and layout

While reading these instructions, you will encounter various symbols, illustrations, and text layouts intended to help you navigate and understand the instructions. Their meaning is explained below.

Safety alerts:
Activities that present specific hazards (to life and limb or possible damage to property) are indicated by safety alerts. Always be sure to follow the instructions given in the safety alerts.

⚠ DANGER
These safety alerts indicate an imminent danger. Ignoring them will result in death or serious injury

⚠ WARNING
These safety alerts indicate potentially imminent danger. Ignoring them could result in death or serious injury

⚠ CAUTION
These safety alerts indicate potentially imminent danger. Ignoring them could result in minor injury

NOTICE
These safety alerts indicate a potentially harmful situation. Ignoring them could result in damage to property or malfunctions

Illustrations:
The illustrations used depict a specific product. For other products, they may have the function of a diagram only. This does not alter the basic workings and operation of the product.

Text layout:
- **First-order bulleted lists**: Items on a bulleted list start with a solid black dot and an indent.
  – **Second-order bulleted lists**: If there is a further listing of subitems, the second-order bulleted list is used.

1 **Legend:** A legend explains the numbered contents of an illustration, presented as a numbered list. Items in a legend start with a number (with no dot) and an indent.
  – **Second-order legend**: In some cases, the numbered contents of an image represent more than just one object. A second-order legend is then used.

1. Instruction steps: These indicate a chronological sequence of instruction steps. The numbers of the steps are in bold and are followed by a period. If a new activity follows, the numbering starts again at "**1.**"
  – **Second-order instruction steps**: In some cases, it is necessary to divide up a step into a few substeps. A sequence of second-order instruction steps is then used.

1 Safety instructions

1.1 General safety instructions

- Putting the products into operation or operating them without having read the instructions is prohibited. The operator must ensure that the instructions are read and understood by all persons tasked with working on the product or who supervise or instruct such persons. Retain the instructions for further use.
- The product may only be used in awareness of the potential dangers, in proper technical condition, and according to the information in this manual.
- Any faults that could affect safety must be remedied according to responsibility. The supervisor must be notified immediately in case of malfunctions outside one's individual scope of responsibility.
- Unauthorized modifications and changes can have an unpredictable effect on safety and operation. Unauthorized modifications and changes are therefore prohibited. Only original SKF spare parts and SKF accessories may be used.
- Any unclear points regarding proper condition or correct assembly/operation must be clarified. Operation is prohibited until issues have been clarified.
- The components used must be suitable for the intended use and the applicable operating conditions, e.g. max. operating pressure and ambient temperature range, and must not be subjected to torsion, shear, or bending.

1.2 General electrical safety instructions

- Electrical devices must be kept in proper condition. This must be ensured by periodic inspections in accordance with the relevant applicable standards and technical rules. The type, frequency, and scope of the inspections must be determined in accordance with the risk assessment to be carried out by the operator. Work on electrical components may be performed only by qualified electricians. Connect the electrical power only in accordance with the valid terminal diagram and in observance of the relevant regulations and the local electrical supply conditions.
- Work on electrical components may be performed only in a voltage-free state and using tools suitable for electrical work. Do not touch cables or electrical components with wet or moist hands.
- Fuses must not be bridged. Always replace defective fuses with fuses of the same type.
- Ensure proper connection of the protective conductor for products with protection class I. Observe the specified enclosure rating.
- The operator must implement appropriate measures to protect vulnerable electrical devices from the effects of lightning during use. The electrical device is not furnished with a grounding system for the dissipation of the respective electric charge and does not have the voltage strength necessary to withstand the effects of lightning.

1.3 General behaviour when handling the product

- Familiarize yourself with the functions and operation of the product. The specified assembly and operating steps and their sequences must be observed.
- Keep unauthorized persons away.
- Wear personal protective equipment always.
- Precautionary operational measures and instructions for the respective work must be observed.
- In addition to these Instructions, general statutory regulations for accident prevention and environmental protection must be observed.
- Precautionary operational measures and instructions for the respective work must be observed. Uncertainty seriously endangers safety.
- Safety-related protective and safety equipment must not be removed, modified or affected otherwise in its function and is to be checked at regular intervals for completeness and function.
- If protective and safety equipment has to be dismantled, it must be reassembled immediately after finishing the work, and then checked for correct function.
- Remedy occurring faults in the frame of responsibilities. Immediately inform your superior in the case of faults beyond your competence.
- Never use parts of the centralized lubrication system or of the machine as standing or climbing aids.

1.4 Intended use

Supply of lubricants.
The product is intended solely for installation in another machine.
Use is only permitted within the scope of commercial or economic activity by professional users, in compliance with the specifications, technical data, and limits specified in this manual.

1.5 Persons authorized to use the product

Operator
A person who is qualified by training, knowledge and experience to carry out the functions and activities related to normal operation. This includes avoiding possible hazards that may arise during operation.

Specialist in electrics
Person with appropriate professional education, knowledge and experience to detect and avoid the hazards that may arise from electricity.

Specialist in mechanics
Person with appropriate professional education, knowledge and experience to detect and avoid the hazards that may arise during transport, installation, start-up, operation, maintenance, repair and disassembly.

1.6 Foreseeable misuse

Any usage of the product other than as specified in this manual is strictly prohibited. Particularly prohibited are:
- Use of non-specified consumables, contaminated lubricants, or lubricants with air inclusions.
- Use of C3 versions in areas with aggressive, corrosive substances (e.g., high salt load).
- Use of plastic parts in areas with high exposure to ozone, UV light, or ionizing radiation.
- Use to supply, convey, or store hazardous substances and mixtures as defined in the CLP Regulation (EC 1272/2008) or GHS with acute oral, dermal, or inhalation toxicity or substances and mixtures that are marked with hazard pictograms GHS01-GHS06 and GHS08.
- Use to supply, convey, or store Group 1 fluids classified as hazards as defined in the Pressure Equipment Directive (2014/68/EU) Article 13 (1) a).
- Use to supply, convey, or store gases, liquefied gases, dissolved gases, vapors, or fluids whose vapor pressure exceeds normal atmospheric pressure (1013 mbar) by more than 0.5 bar at their maximum permissible operating temperature.
- Use in an explosion protection zone.
- Use without proper securing against excessively high pressures, in the case of pressurized products.
- Use outside of the technical data and limits specified in this manual.

1.7 Referenced documents

In addition to this manual, the following documents must be observed by the respective target group:
- Company instructions and approval rules

If applicable:
- Safety data sheet of the lubricant used
- Project planning documents
- Supplementary information regarding special designs of the pump. This you will find in the special system documentation.
- Instructions for other components for setting up the centralized lubrication system.

1.8 Prohibition of certain activities

- Replacement of or modifications to the pistons of the pump elements
- Repairs or modifications to the drive.
- Alterations to the control circuit board beyond adjustment of lubrication times and interval times or replacement in case of defect.
- Alterations to the power supply board beyond replacement in case of defect.

1.9 Painting plastic components and seals

The painting of any plastic components and seals of the products described is prohibited. Completely mask or remove plastic components before painting the main machine.

1.10 Safety markings on the product

Fig. 1

	Risk of dangerous electrical voltage (for VAC pumps only)
	Risk of wrapping, pinching, crushing, or shearing when the reservoir lid is open (only for reservoirs with filling from above)
	Risk of injury from spring tension (only for pumps with a follower plate)
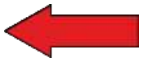	Direction of rotation of the pump (stirring paddle)
	Read the instructions (before initial filling of a pump with double-lip follower plate delivered without lubricant)

Possible safety markings on the product

NOTE
Further to the findings of the workplace risk evaluation the operating company has to attach additional markings (e. g. warnings, signs giving orders, prohibition signs or labelling as specified by CLP / GHS), where appropriate.

1.11 Note on the type plate

The type plate provides important data such as the type designation, order number, and sometimes regulatory characteristics. To avoid loss of this data in case the type plate becomes illegible, it should be entered in the manual.

Table 2

Table for copying out the type plate

Model:	_____
P-No. :	_____
S-No. :	_____

Fig. 2

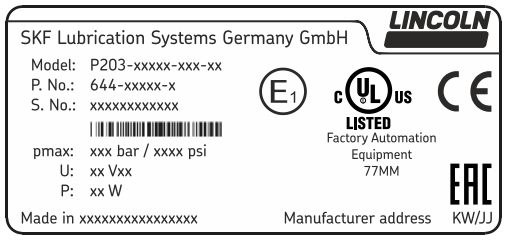

Type plate VDC with E1 and UL certification

1.12 Notes on CE marking

CE marking is effected following the requirements of the applied directives requiring a CE marking:

- 2014/30/EC Electromagnetic Compatibility
- 2011/65/EU Directive on the restriction of the use of certain hazardous substances in electrical and electronic equipment (RoHS II)

1.13 Note on Pressure Equipment Directive

Due to its performance characteristics, the product does not reach the limit values defined in Article 4, Paragraph 1, Subparagraph (a) (ii) and is excluded from the scope of Pressure Equipment Directive 2014/68/EU in accordance with Article 1, Paragraph 2 Subparagraph (f).

1.14 Note on UKCA marking

The UKCA conformity marking confirms the product's conformity with the applicable legal provisions of Great Britain.

1.15 Note on UL mark

The UL Mark certifies that the product has UL certification of compliance with U.S. and Canadian safety regulations.

1.16 Note on ECE mark

The ECE test mark (E1) confirms that an ECE type approval (components requiring approval on motor vehicles) has been granted for a product which bears this mark on its type plate.

1.17 Notes on ADR certificate

ADR
TÜ.EGG.054-01

Pumps with ADR certification are marked with the sign shown here.

The use of the lubricant feed pumps described meets the ADR requirements for the utilization of the ADR connection materials specified in the type identification code and for the correct performance of electrical assembly outside of potentially explosive atmospheres in Zones 0, 1 or 2 in vehicle types EX/II, EX/III, FL and AT.

Testing institute: TÜV-SÜD Auto Service GmbH
Component marking: TÜ.EGG.054-01

1.18 Note on EAC marking

The EAC conformity marking confirms the product's conformity with the applicable legal provisions of the Eurasian customs union.

1.19 Note on China RoHS mark

The China RoHS mark confirms that there is no danger to persons or the environment from the regulated substances contained within for the intended period of use (year number shown in the circle).

1.20 Emergency shutdown

This is done by a course of action to be defined by the operator.

1.21 Assembly, maintenance, fault, repair

Prior to the start of this work, all relevant persons must be notified of it. At a minimum, the following safety measures must be taken before any work is done:

- Unauthorized persons must be kept away
- Mark and secure the work area
- Cover adjacent live parts
- Dry any wet, slippery surfaces or cover them appropriately
- Cover hot or cold surfaces appropriately

Where applicable:

- Depressurize
- Isolate, lock and tag out
- Check to ensure live voltage is no longer present
- Ground and short-circuit.

The product should be protected as much as possible from humidity, dust, and vibration, and should be installed so that it is easily accessible. Ensure an adequate distance from sources of heat or cold. Any visual monitoring devices present, such as pressure gauges, min./max. markings, or oil level gauges must be clearly visible. Observe the mounting position requirements.

Drill required holes only on non-critical, non-load-bearing parts of the operator's infrastructure. Use existing holes where possible. Avoid chafe points. Immobilize any moving or detached parts during the work. Adhere to the specified torques.

If guards or safety devices need to be removed, they must be reinstalled immediately following conclusion of work and then checked for proper function.

Check new parts for compliance with the intended use before using them.

Avoid mixing up or incorrectly assembling disassembled parts. Label parts. Clean any dirty parts.

1.22 First start-up, daily start-up

Ensure that:

- All safety devices are fully present and functional
- All connections are properly connected
- All parts are correctly installed
- All warning labels on the product are fully present, visible, and undamaged
- Illegible or missing warning labels are immediately replaced.

1.23 Residual risks

Table 3

Residual risks

Residual risk	Possible in lifecycle	Avoidance / Remedy
Personal injury / property damage due to falling of hoisted parts	A B C G H K	• Unauthorized persons must be kept away. • Personnel are not permitted to stand under hoisted parts. • Lift parts using suitable lifting gear.
Personal injury / property damage due to tilting or falling product due to non-compliance with specified torques	B C G	• Adhere to the specified torques. • Mount the product only on components with a sufficient load-carrying capacity. • If no torques are specified, use those specified for the screw size for screws of strength class 8.8.
Personal injury / property damage caused by electric shock resulting from power lead damage	B C D E F G H	• Inspect power cables for damage prior to initial use and then at regular intervals. • Do not install the cable on moving parts or wearing spots. If this cannot be avoided, use anti-kink coils and/or conduits.
Personal injury, property damage due to spilled, leaked lubricant	B C D F G H K	• Be careful when filling the reservoir and then connecting or disconnecting the lubricant lines. • Use only hydraulic screw unions and lubrication lines suitable for the specified pressure. • Do not install lubrication lines on moving parts or chafe points. If this cannot be avoided, use anti-kink coils and/or conduits.
Loss of electrical protective function due to incorrect assembly of the electrical components after a repair	G	• An electrical safety check in accordance with EN 60204-1 must be performed after the replacement of electrical components.
Reservoirs with a follower plate are under spring tension	G	• Wait until tension has been relieved on the spring as much as possible (i.e., the reservoir is empty) before removing a reservoir with a follower plate. • Provide a suitable protective measure when loosening the reservoir, e.g., a retaining strap. Do not work with your head directly above the reservoir.
Risk of injury from pinching, crushing, or shearing through contact with the agitator blade when the pump is running and the reservoir lid is open.	B C D E F G	• Never reach into the reservoir when the pump is running. • Do not remove the reservoir lid unless the pump is first disconnected from the power supply.

Lifecycle phases: A = Transport, B = Assembly, C = First start-up, D = Operation, E = Cleaning, F = Maintenance, G = Malfunction, repair, H = Shutdown, K = Disposal

2 Lubricants

2.1 General information

Lubricants are selected specifically for the relevant application. The manufacturer or operator of the machine should ideally make the selection in consultation with the supplier of the lubricant. If you have no or little experience in selecting lubricants for lubrication systems, please contact us. We would be happy to assist you in selecting suitable lubricants and components to build a lubrication system optimized for your particular application. Consider the following points when selecting/using lubricants. This will spare you potential downtime and damage to the machine or lubrication system.

2.2 Material compatibility

The lubricants must generally be compatible with the following materials:

- Plastics: ABS, CR, FPM, NBR, NR, PA, PET, PMMA, POM, PP, PS, PTFE, PU, PUR
- Metals: steel, gray cast iron, brass, copper, aluminum.

2.3 Temperature properties

The lubricant used must be suitable for the specific ambient temperature of the product. The viscosity approved for proper functioning must neither be exceeded at low temperatures nor fall too low at high temperatures. For the approved viscosity, see the “Technical data” chapter.

2.4 Aging of lubricants

Based on past experience with the lubricant used, checks should be conducted at regular intervals defined by the operator, to determine whether the lubricant needs to be replaced due to aging processes (oil separation). In case of doubt regarding the continued suitability of the lubricant, it must be replaced before the system is started up again. If you do not yet have any experience with the lubricant used, we recommend conducting a check after just one week.

2.5 Avoidance of faults and hazards

To avoid faults and hazards, please observe the following:

- When handling lubricants, observe the relevant safety data sheet (SDS) and any hazard labeling on the packaging.
- Due to the large number of additives, some lubricants that meet the pumpability requirements specified in the manual are not suitable for use in centralized lubrication systems.
- Whenever possible, always use SKF lubrication greases. They are ideal for use in lubrication systems.
- Do not mix lubricants. This can have unpredictable effects on the properties and usability of the lubricant.
- Use lubricants containing solid lubricants only after technical consultation with SKF.
- The lubricant’s ignition temperature has to be at least 50 kelvin above the maximum surface temperature of the components.

2.6 Solid lubricants

Solid lubricants may only be used after prior consultation with SKF. When solid lubricants are used in lubrication systems, the following rules generally apply:

Graphite:

- Maximum graphite content 8%
- Maximum grain size 25 µm (preferably in lamellar form).

MoS2:

- Maximum MoS2 content 5%
- Maximum grain size 15 µm.

Copper:

- Lubricants containing copper are known to lead to coatings forming on pistons, bore holes, and mating surfaces. This can result in blockages in the centralized lubrication system.

Calcium carbonate:

- Lubricants containing calcium carbonate are known to lead to very heavy wear on pistons, bore holes, and mating surfaces.

Calcium hydroxide:

- Lubricants containing calcium hydroxide are known to harden considerably over time, which can lead to failure of the centralized lubrication system.

PTFE, zinc, and aluminum:

- For these solid lubricants, it is not yet possible to define any limit values for use in lubrication systems on the basis of existing knowledge and practical experience.

2.7 Chisel pastes

Due to their high resistance to pressure and temperature, chisel pastes are used to reduce wear on insert tools and wear bushings on hydraulic and pneumatic hammers, stone crushers and hydraulic grabs. Before use, observe the safety data sheet (SDS) and the technical data and application limits of the respective chisel paste.

Chisel pastes may be pumped only with SKF pumps and pump elements developed for this application.

Chisel pastes are special lubricants and must not be used as a lubricant for bearings.

Grease guns filled with chisel paste must be permanently marked with a corresponding note.

NOTE

The use of chisel paste requires prior consultation with the SKF Product Management.

3 Overview, functional description

3.1 Pumps without a follower plate

Fig. 3

P203 without a follower plate

1 Reservoir cover
2 Reservoir ventilation
3 Reservoir
4 Filler nipple
5 Pump housing
6 Pump elements
7 Stirring paddle

Reservoir
The reservoir stores the lubricant. Different reservoir designs and reservoir sizes exist in accordance with the pump variant.

Reservoir cover
Is used to fill the reservoir with clean and suitable lubricant, and also to protect the lubricant from contamination.

Reservoir ventilation
Aerates the reservoir while the pump is working and lubricant is being fed.

Stirring paddle
The stirring paddle homogenizes and smooths the lubricant while the pump is running. In addition, the lower vertical part of the stirring paddle presses the lubricant in the direction of the pump elements and improves the suction characteristics of the pump as a result.

Pump housing
The pump housing contains the motor, the electrical connections, the filler nipple, the pump elements, the power supply board and (if applicable) the intermittent low-level signal.

Pump elements
The pump can be equipped with up to 3 pump elements.

Filler nipple
Used for filling the pump from below. Once the filler nipple is removed, corresponding accessories can be used to connect the external grease return from the pressure limiting valves to the pump elements through this port.

3.2 Pumps with a follower plate

Fig. 4

P203 with a follower plate

1 Contact rod

2 Follower plate or double-lip follower plate

In addition to the components shown, pumps with follower plates also have the components described below:

Follower plate
The follower plate is positioned on top of the lubricant and presses it with spring force in the direction of the pump elements. Its pressure improves the suction characteristics of the pump.

Double-lip follower plate (reservoir XBD, XBR, XBxG)
The two sealing lips of the double-lip follower plate provide improved sealing for lubrication greases that tend to separate under pressure. This prevents grease or oil elements from penetrating into the space above the double-lip follower plate.

Contact rod
The contact rod of the follower plate houses the reed contacts for the full and low-level signal functions. The follower plate contains a magnet that activates a reed contact when one of the switching points is reached. The reed contact for the low-level signal is located at the bottom switching point, and the reed contact for the full signal is located at the top switching point.

Float switch (reservoir YLBO)
In reservoirs with lubrication oil, the signals indicating the fill level of the reservoir are sent by a float switch.

3.3 Display and control elements

Fig. 5

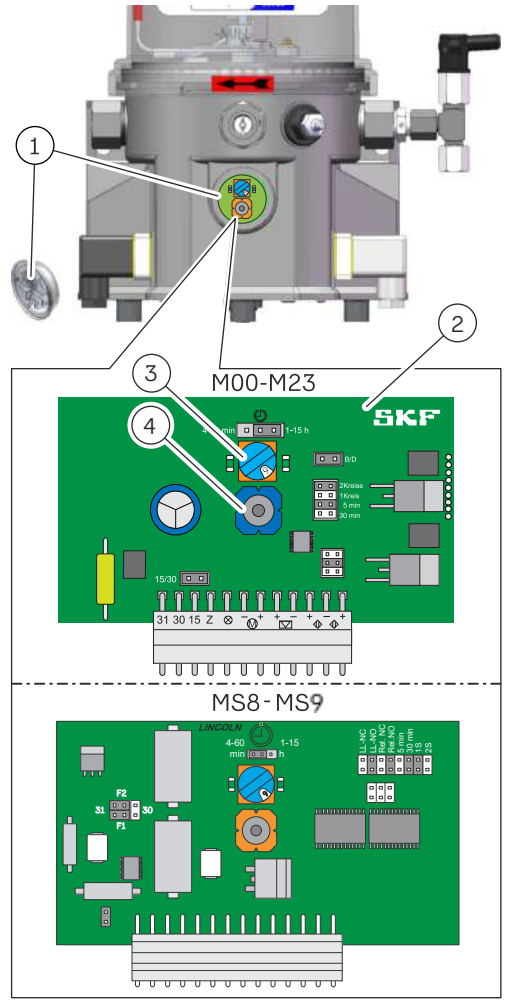

Display and control elements of the control circuit board

1 Screw cap

2 Control circuit board (M00-M23 or MS8-MS9)

Screw cap for control circuit board
The transparent screw cap allows viewing of the LED indicators (of operational and fault states) on the control circuit board. The control elements (rotary switch for setting the time, button for fault acknowledgment and additional lubrication) can be accessed by removing the screw cap.

Control circuit board
The control circuit board is located behind the screw cap.
The control circuit board is equipped with an EEPROM. This protects the control circuit board from data loss.

3.3.1 Functional description of the control circuit board M00-M23

Fig. 6

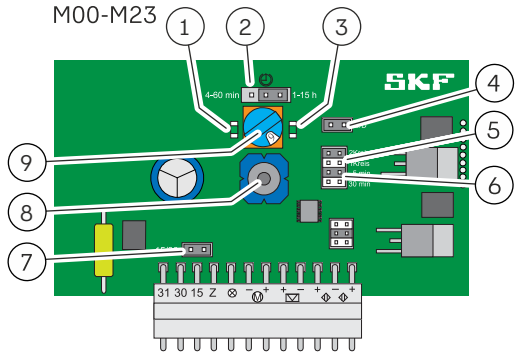

Control circuit board M00-M23

1 LED for power supply
2 Jumper time range, pause time
3 LED for operation/fault
4 Jumper signal output
5 Jumper number of lubrication circuits
6 Jumper monitoring time
7 Terminal 15/30
8 Pushbutton
9 Rotary switch, pause time

The control circuit boards M00-M23 are preferred for use where the lubrication procedures are to take place depending on the operating hours of the higher-level machine or of its auxiliary components or of a vehicle, and where it is useful to monitor important functions of the centralized lubrication system.

Function check after switching on
Every time the machine contact or driver switch is switched on, there is a function check of the pump motor and the right-hand LED. During the function check, the pump motor runs for 0.1 seconds (this moves the stirring paddle briefly) and the right-hand LED lights up for 2 seconds.

Field of application and operational readiness
Control circuit board M00-M07
1 Lubrication routine based on the machine's operating hours only. The centralized lubrication system is operational when the machine contact (remote contact) is switched on.
2 Lubrication routine based on the commercial vehicle's operating hours only. The centralized lubrication system is operational when the driver switch (terminal 30) is switched on.

Control circuit board M08-M23
1 Lubrication routine based on the machine's operating hours and also on auxiliary components.
The power supply voltage (+ and -) is applied. The centralized lubrication system is operational when the machine contact (remote contact) is switched on.
2 Lubrication routines based only on the commercial vehicle's operating hours and also on auxiliary components.
The power supply voltage is applied to terminal 30/31. In addition, the necessary remote contact at terminal 15 is switched on.

The left-hand LED (Fig. 6/1) on the control circuit board shows a steady light when ready for operation.

Display of faults
The right-hand LED (Fig. 6/3) on the control circuit board indicates faults.
The type of display/signal output is set by the jumper positions on the circuit board as either a flashing light or a steady light.
- M00-M15: Flashing light
- M15-M23: Steady light

Monitored lubrication circuits
1 or 2 lubrication circuits are monitored, depending on the position of the jumper (Fig. 6/4) on the circuit board. One metering device with a piston detector is always required for each lubrication circuit.
- M00-01; M04-05; M08-09; M12-13; M16-17; M20-M21: 1 lubrication circuit
- M02-03; M06-07; M10-11; M14-15; M18-19; M22-23: 2 lubrication circuits.

Monitoring time
If no signal is received from the piston detector of the monitored metering device within the set monitoring time, a fault notification is issued. If 2 lubrication circuits are monitored, both piston detectors must send a signal within the set monitoring time.

Table 4

Monitoring time	
Control circuit board	
M00; M02; M04; M06; M08; M10; M12; M14; M16; M18; M20; M22	5 minutes
M01; M03; M05; M07; M09; M11; M13; M15; M17; M19; M21; M23	30 minutes

Operating time
During the operating time, the pump supplies lubricant into the lubrication circuits. The operating time lies within the monitoring time. The length of the operating time essentially depends on the location where the piston detector is mounted and on the lubricant requirements.

The operating time begins after the end of the pause time and ends with the signal of the piston detector (min. 3 seconds) to the control circuit board within the monitoring time. If two lubrication circuits are monitored, then the operating time ends after the second piston detector has sent its signal to the control circuit board.

3.4 Pumps with an ultrasonic sensor

Fig. 7

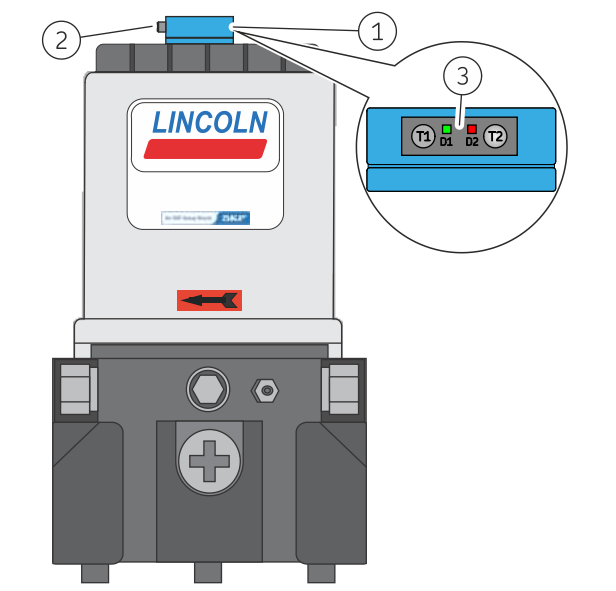

Ultrasonic sensor on the P203

1 Ultrasonic sensor
2 M12 connector
3 LED indicators

Ultrasonic sensor (BIBO-, BABO-reservoir)
Used for monitoring the fill level in the reservoir. The current fill level is indicated by two LEDs (see the “Technical data” of the ultrasonic sensor). The switching points are set at the factory according to the reservoir size.

Table 5

Possible versions of the electrical connections

2		M12 connector, A-coded acc. to DIN EN ISO 61076-2-101

NOTE
Depending on the particular pump configuration, the low-level signal is either connected to the pump control internally, or the customer must connect a cable to the ultrasonic sensor for processing of the low-level signal.

3.5 Electrical connections

Fig. 8

Electrical connections of the P203

1 Power supply
2 Signal connection (output)
3 Fill level signal

Table 6

Possible versions of the electrical connections

	Rectangular connector 3 + PE acc. to DIN EN 175301-803
	M12 connector acc. to DIN EN ISO 61076-2-101
	Bayonet connector, 4-pin, acc. to ISO 15170-1
	Bayonet connector, 7-pin, acc. to ISO 15170-1

NOTE
The design and arrangement of the electrical connections depend on the pump version ordered.

3.6 Hydraulic connection diagrams

Fig. 9

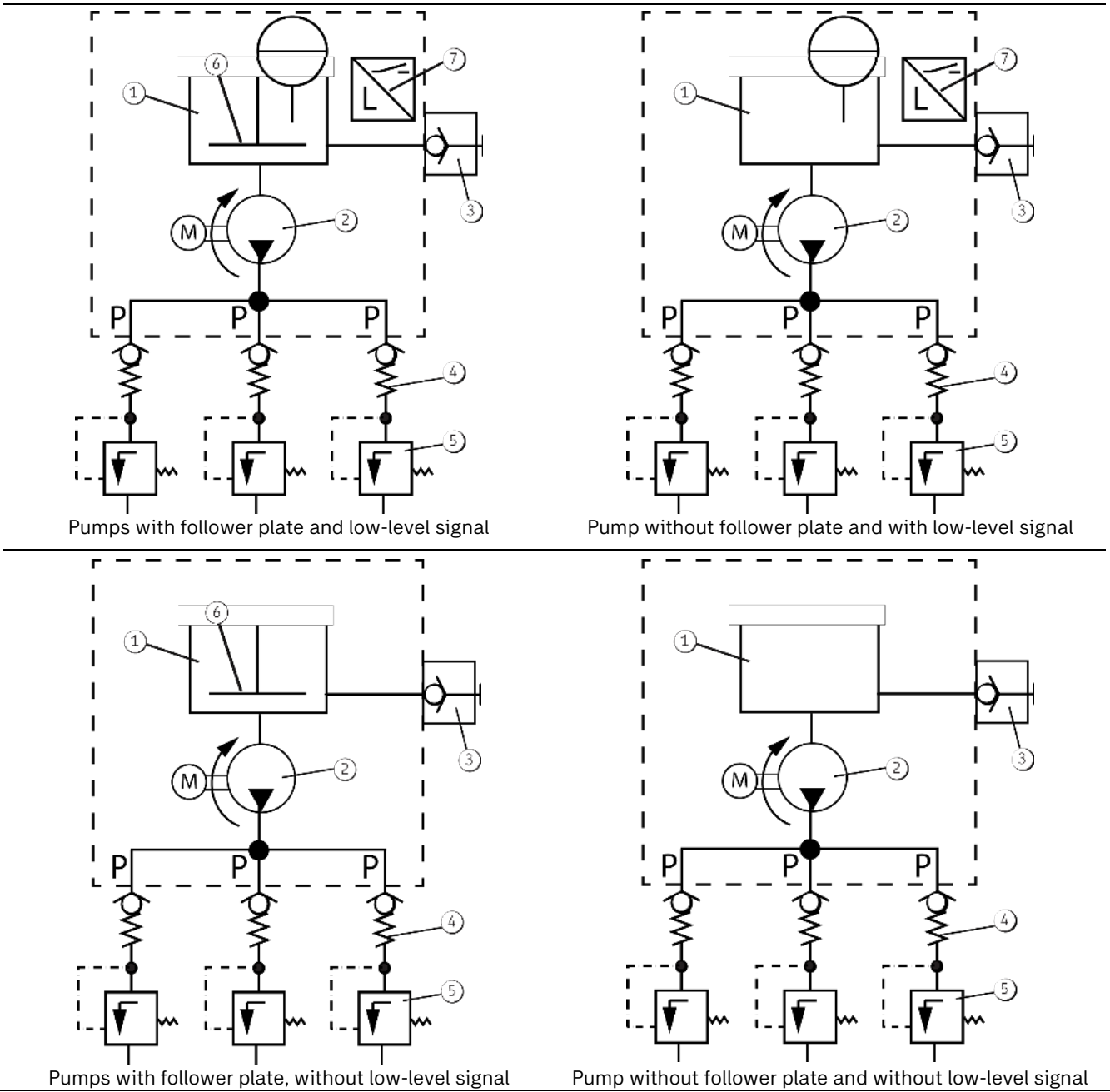

Hydraulic connection diagrams

1 Reservoir
2 Pump
3 Filler nipple
4 Check valve*
* Does not come included with the pump
5 Pressure limiting valve*
6 Follower plate
7 Low-level signal
P Pressure line

4 Technical data

4.1 General technical data

Table 7

Technical data

Parameter	Values
Operating pressure	Max. 350 bar [5076 psi]
Pump elements	Max. 3
Direction of rotation	Clockwise
Sound pressure level	< 70 dB (A)
Nominal speed	20 rpm
Cyclic duration factor[1)]	S3 25 ON time 120 min
Ambient temperature[1)]	-40 °C to +70 °C [-40 °F to +158 °F]
Mounting position[2)]	Upright, i.e., with the reservoir at top
Lubricants[3)]	• Lubricating greases up to and including NLGI 2 • Lubrication oils with at least 40 mm^2/s (cST) at ambient temperature • Chisel paste (see section “Lubricants”)
Filling options	Depends on the pump design: • Filler nipple • Reservoir cover (with reservoirs without a follower plate) • Optional fill connection • mechanical shut-off device (for reservoirs with double-lip follower plate)

1) The specified ambient temperature range requires that the lubricant used can be pumped at the given ambient temperature. The upper limit of the ambient temperature is load-dependent and is determined primarily by the running time and the operating pressure. The cyclic duration factor specified is applicable for NLGI 2 lubricants, an ambient temperature of 60 °C [140 °F], and a mean back pressure on the pump element of 160 bar [2321 psi]. The maximum ON time should be reduced in the case of temperatures ≥ 60 °C [140 °F] and heavy loading (meaning higher pressure). UL-certified pumps can only be operated up to a maximum permissible ambient temperature of 60 °C [140 °F] regardless of the loading.

2) Rotary installation is possible for pumps with a follower plate, e.g., in wind turbines. Maximum speed and maximum distance to the rotational axis can be specified on request. If pumps without a follower plate are expected to be installed in an inclined position (e.g. on construction or agricultural equipment), the following applies:
- The maximum filling must be reduced in accordance with the inclination to be expected (< MAX mark).
- The minimum fill level must be increased if the expected inclination is more than 30° (> MIN mark), otherwise functioning could be impaired due to a reduced amount of lubricant in the suction area of the pump.

3) Observe the restrictions in the section “Operational limits of the intermittent empty signal.”

4.2 Weight of the empty pump

Table 8

Weight of the empty pump with reservoir XLBO or XBD

Reservoir size					
2 liters	[0.53 gal.]	Approx. 6.5 kg	[14.3 lbs.]	XLBO reservoir	(Reservoir without follower plate)
4 liters	[1.06 gal.]	Approx. 7.4 kg	[16.3 lbs.]	XLBO reservoir	
8 liters	[2.11 gal.]	Approx. 8.5 kg	[18.7 lbs.]	XLBO reservoir	
11 liters	[2.90 gal.]	Approx. 12.0 kg	[26.5 lbs.]	XLBO reservoir	
15 liters	[3.96 gal.]	Approx. 12.5 kg	[27.6 lbs.]	XLBO reservoir	
20 liters	[5.28 gal.]	Approx. 13.5 kg	[29.8 lbs.]	XBD reservoir	(Reservoir with follower plate)
25 liters	[6.60 gal.]	Approx. 15.5 kg	[34.2 lbs.]	XBD reservoir	

Table 9

Weight of the empty pump with reservoir XL_G or XBDG

Reservoir size					
30 liters	[7.93 gal.]	Approx. 13.8 kg	[30.4 lbs.]	XL_G reservoir	(Reservoir without follower plate)
40 liters	[10.57 gal.]	Approx. 15.5 kg	[34.2 lbs.]	XL_G reservoir	
50 liters	[13.21 gal.]	Approx. 17.3 kg	[38.1 lbs.]	XL_G reservoir	
60 liters	[15.85 gal.]	Approx. 19.0 kg	[41.9 lbs.]	XL_G reservoir	
25 liters	[6.60 gal.]	Approx. 14.0 kg	[30.7 lbs.]	XBDG reservoir	(Reservoir with follower plate)
35 liters	[9.25 gal.]	Approx. 15.8 kg	[34.8 lbs.]	XBDG reservoir	
45 liters	[11.89 gal.]	Approx. 17.5 kg	[38.6 lbs.]	XBDG reservoir	
55 liters	[14.53 gal.]	Approx. 19.3 kg	[42.6 lbs.]	XBDG reservoir	

4.3 Electrical data

Table 10

Electrical data

Parameter	Values	
	12 VDC pump	**24 VDC pump**
Enclosure rating[1]	IP69K	IP69K
Protection classes		
• Rectangular connector	SELV / PELV / FELV	SELV / PELV / FELV
• Bayonet connector	SELV / PELV	SELV / PELV
• Screwed gland with cable and Deutsch male connector	SELV / PELV	SELV / PELV
Rated voltage ±10 %	12 VDC	24 VDC
Current input up to	6 A	3 A
Recommended back-up fuse	6.0 A (slow)	3.0 A (slow)
Output signal	dry	dry
Switching voltage, max.	30 VDC	30 VDC
Switched current, max.	700 mA	700 mA

[1] The specified enclosure rating of the pump requires the use of IP69K-compliant connection sockets and corresponding cables. If connection sockets and cables with a lower protection rating are used, the lowest of those ratings will apply as the enclosure rating. For the enclosure ratings achievable when using the connection sockets and cable supplied by us, see the “Spare parts” chapter.

4.4 Nominal delivery rates

NOTE

The specified nominal delivery rates per stroke apply to NLGI grade 2 lubrication greases in the case of pump elements 5, 6, 7, and R and to NLGI grade 0 lubrication greases in the case of pump element L, in all cases at an ambient temperature of +20 °C [68 °F] and a back pressure of 100 bar [1450 psi] at the pump element.
Differences in operating conditions or a different pump configuration will lead to changes in the motor speed and thus to a change in the delivery rate per unit of time. If the change in the motor speed necessitates an adjustment to the delivery rate per unit of time, then this will be reasonably accomplished by adjusting the lubrication and pause time setting of the pump.

Table 11

Nominal delivery rate per stroke

Pump element	L[1]	5	6	7	R	B [2]	C [3]
Nominal delivery rate per stroke	0.03 ccm	0.10 ccm	0.16 ccm	0.22 ccm	0.04 - 0.18 ccm	0.10 ccm	0.24 ccm

[1] The pump element “L” must only be used to supply lubrication greases of NLGI Grade 00. Observe the restrictions in the section “Operational limits of the intermittent empty signal.”
[2] The pump element “B” is especially suitable for use in contaminated environments, because the pumped lubricant is conveyed through a bypass hole on the check valve.
[3] The pump element “C” is designed only for pumping chisel paste. When using chisel paste, observe the relevant information in the “Lubricants” section.

4.4.1 Influencing factors on the delivery rate

Table 12

Influencing factors on the delivery rate

Influencing factors	Increasing the delivery rate	Reducing the delivery rate
Ambient temperature	> + 20 °C	< + 20 °C
Consistency class of the lubricating grease	< NLGI 2	N/A
Number of pump elements	N/A	> 1
Back pressure at the pump element	< 100 bar	> 100 bar

4.4.2 Delivery rate charts for typical NLGI 2 lubricants

Fig. 10

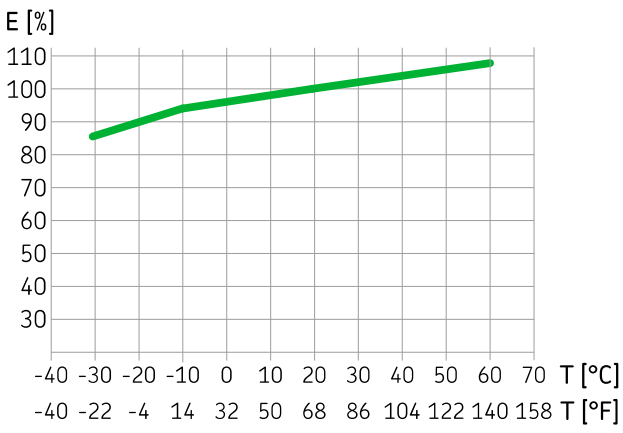

Delivery rate chart for low-temperature grease

Fig. 11

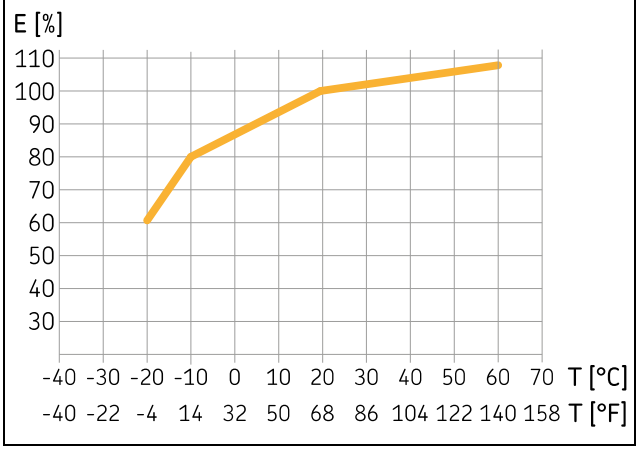

Delivery rate chart for high-temperature grease

NOTE

The values specified in the delivery rate charts represent the average value between different high-temperature and low-temperature greases. The values could therefore vary with the lubrication grease actually used in the pump. This may need to be borne in mind when designing the lubrication system.

Calculation of temperature-dependent delivery rate, using a high-temperature grease as an example

$$OUT = RPM \times V \times E$$

OUT Calculated delivery rate per pump element (ccm/min)
RPM Nominal speed of the pump (in this example: *RPM = 20 rpm*)
V Nominal delivery rate per pump element (in this example: *V = 0.22 ccm/stroke)*
E Efficiency as a percentage (in this example: *E = 80%*) at a temperature of T = -10 °C)

$$OUT = 20\frac{1}{min} \times 0{,}22\ \text{ccm} \times 80\ \% = 3{,}5\frac{ccm}{min}$$

4.5 Principle of operation of the intermittent low-level signal

Components of the intermittent low-level signal
The intermittent low-level signal uses a contactless mechanism, comprised essentially of the following parts:

- Stationary reed switch (Fig. 12 to 14/1) in the reservoir bottom
- Mobile baffle plate (Fig. 12 to 13/2) connected to the stirring paddle, with a magnet (Fig. 12 to 14/3) and a cam (Fig. 13/4)

Fig. 12

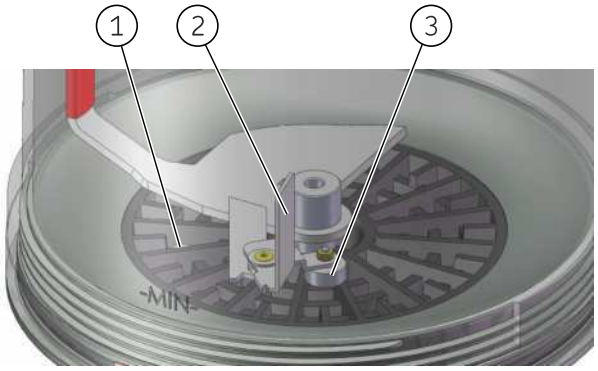

Perspective view

Functional description of the intermittent low-level signal

1 When the reservoir is filled with a lubrication grease that is suitable for the intermittent low-level signal, and the pump is running, the baffle plate (Fig. 12 to 13/2) is deflected outwards by the resistance of the lubrication grease.
2 As a result, the magnet (Fig. 12 to 14/3) connected to the baffle plate moves along its inner circular path (Fig. 13), which means that it **cannot** trigger a pulse on the reed switch (Fig. 12 to 14/1).
3 During each revolution, a cam (Fig. 13/4) forces the magnet and the pivot-mounted baffle plate back out onto the outer circular path (Fig. 14)
4 After passing the cam, the resistance of the lubricant pushes the baffle plate and the magnet back inwards, onto the inner circular path.

Fig. 13

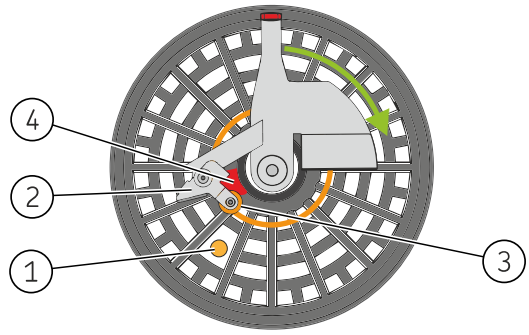

Magnet on inner circular path

5 When the lubricant level in the reservoir drops so far that the resistance of the lubrication grease is no longer enough to deflect the baffle plate (Fig. 12 to 13/2), the magnet (Fig. 12 to 14/3) stays on the outer path, triggering a pulse during each revolution as it slides over the reed switch (Fig. 12 to 14/1).
6 If the magnet (Fig. 12 to 14/3) moves over the reed switch (Fig. 12 to 14/1) on the outer circular path five times during one work cycle, a low-level signal is output directly on the pump's signal connection.

Fig. 14

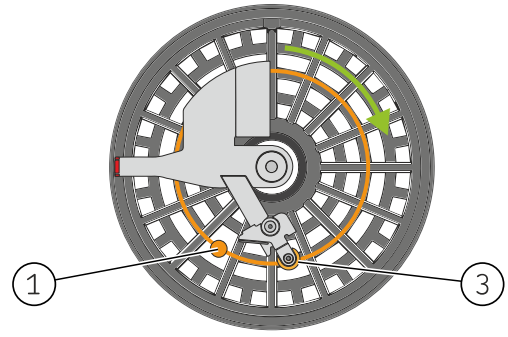

Magnet on outer circular path

4.6 Operational limits of the intermittent empty signal

For the correct functioning of the intermittent empty signal, the following lubricant consistencies must be maintained. The correct functioning of the intermittent empty signal is not guaranteed above the specified temperature range. The lower temperature ranges are contingent on the suitability of the respective lubricant for these temperatures. Excessively high consistency of the lubricant could otherwise lead to malfunctions such as interruption of the lubricant feeding or possibly to damage to the pump (e.g., bending of the stirring paddle).

NOTE

The intermittent empty signal is not suitable for lubricating greases with an NLGI class ≤ 0.

Fig. 15

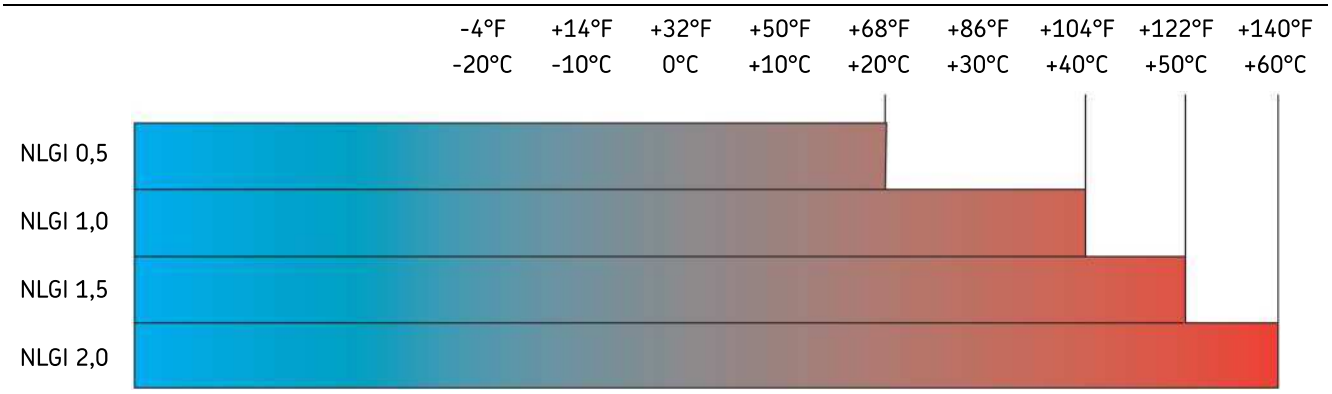

Operational limits of the intermittent empty signal

4.7 Ultrasonic sensor

4.7.1 BIBO reservoir design

Table 13

Technical data

Parameter	Value
Blind zone	0-65 mm
Sensing range	600 mm
Ultrasonic frequency	Approx. 400 kHz
Sonic frequency	3.7 Hz
Resolution	0.18 mm
Accuracy	± 1 %
Reproducibility	± 15 %
Sensing range in centimeters	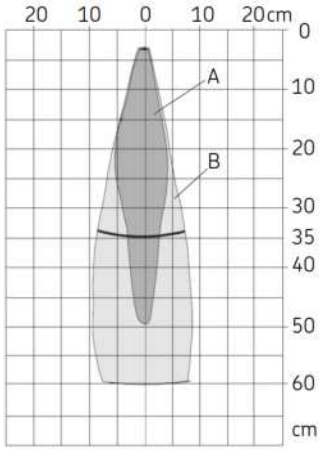 The dark gray areas (A) indicate the range in which the standard reflector (a tube) is reliably detected. The light gray areas (B) represent the range in which a large reflector (such as the lubricant surface) is still detected provided that it is optimally aligned to the sensor. No evaluation is possible outside the light gray area.
Operating voltage U_B	9-30 VDC (reverse polarity resistant)
Residual ripple	± 10%
No-load power consumption	≤ 60mA
Connection type	M12 connector, 5-pin
Response delay	272 ms
Readiness delay	< 300 ms
Enclosure rating per EN 60529	IP65 / IP67 (depending on the cable box used)
Operating temperature range	- 40 °C to + 70 °C
Switching points	Full signal D1; low-level signal D2 according to the reservoir size; pre-empty signal D3 programmable upon customer request, preset to 10 mm above the low-level signal (use is optional)
Conformity with standards	DIN EN IEC 60947-5-2
Display elements	LED green/LED orange Switching output set/not set
Housing material	PBT, polyester, ultrasonic transducer: PUR, epoxy resin with glass contents
Switching output	3x pnp; UB-2V; Imax = 3 x 200 mA; NO contact, short-circuit proof

NOTE

The specified enclosure rating is contingent on the use of connection sockets and cables suitable for that enclosure rating. If connection sockets and cables with a lower protection rating are used, the lowest of those protection ratings will apply.

Table 14

Electrical connection

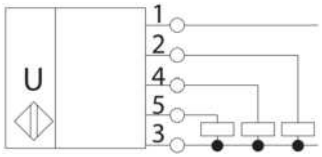

		Cable colors in accordance with IEC 60757
1	+ U_B	Brown (BN)
3	- U_B	Blue (BU)
4	D2	Black (BK)
2	D1	White (WH)
5	D3 / Com	Gray (GY)

Table 15

Display of the circuit states

Parameter	Switching points			Display of the LEDs				
	D1	D2	D3	D1 (up to 10/21)	D1 (from 10/21)	D2 (up to 10/21)	D2 (from 10/21)	--
Full signal (high level)	A	A	B	Orange	Green	Orange	Green	C
Between full signal and pre-empty signal	B	A	B	Green	Orange	Orange	Green	C
Pre-empty signal	B	A	A	Green	Orange	Orange	Green	D
Low-level signal	B	B	B	Green	Orange	Green	Orange	C

A = switched, B = not switched, C = steady, D = flashing

Dimensions:

Fig. 16

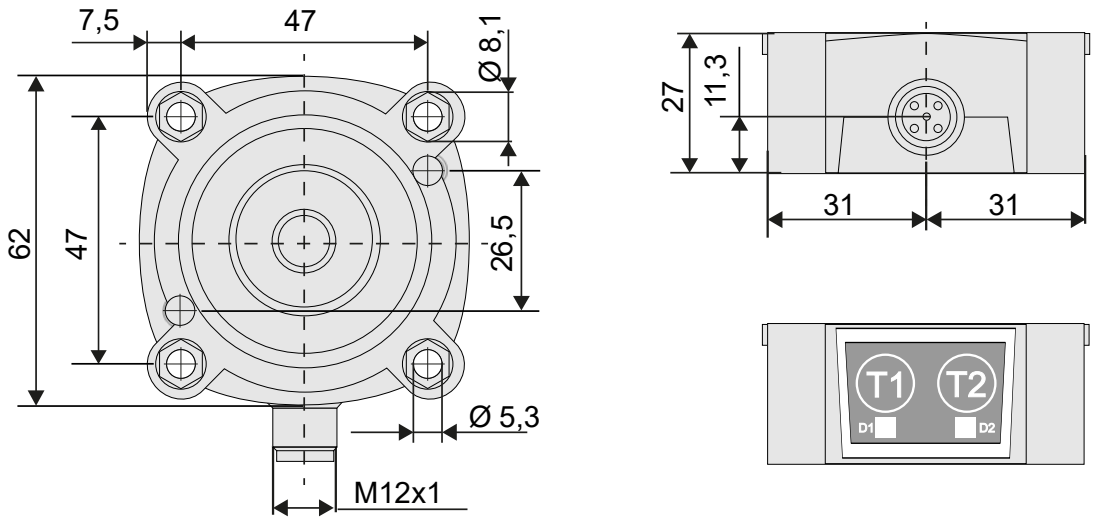

Dimensions

4.7.2 Switching points with BIBO reservoir design

Fig. 17

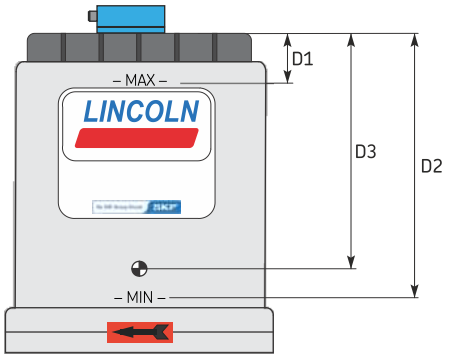

Switching points

Table 16

Switching points

Reservoir size Liters	[gal.]	D1 mm	D2 mm	D3 mm
2	[0.53]	50	165	160
4	[1.06]	65	150	140

D1 = full signal, D2 = low-level signal,
D3 = pre-empty signal

4.7.3 BABO reservoir design

Table 17

Technical data

Parameter	Value
Blind zone	0-30 mm
Sensing range	250 mm
Ultrasonic frequency	Approx. 600 kHz
Sonic frequency	3.7 Hz
Resolution	0.18 mm
Accuracy	± 1 %
Reproducibility	± 15 %
Sensing range in centimeters	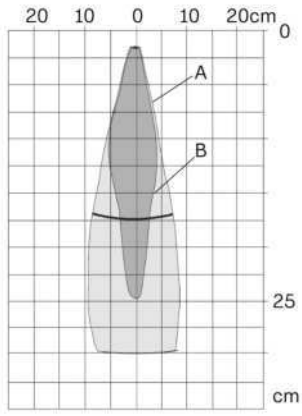 The dark gray areas (A) indicate the range in which the standard reflector (a tube) is reliably detected. The light gray areas (B) represent the range in which a large reflector (such as the lubricant surface) is still detected provided that it is optimally aligned to the sensor. No evaluation is possible outside the light gray area.
Operating voltage U_B	9-30 VDC (reverse polarity resistant)
Residual ripple	± 10%
No-load power consumption	≤ 60mA
Connection type	M12 connector, 5-pin
Response delay	272 ms
Readiness delay	< 300 ms
Enclosure rating per EN 60529	IP65 / IP67 (depending on the cable box used)
Operating temperature range	- 40 °C to + 70 °C
Conformity with standards	DIN EN IEC 60947-5-2
Display elements	LED D1 (green/red) LED D2 (green)
Housing material	PBT, polyester, ultrasonic transducer: PUR, epoxy resin with glass contents
Current output 4 – 20 mA	R_L ≤ 100 Ω at 9 V ≤ U_B ≤ 15 V / R_L ≤ 500 Ω at U_B ≥ 15 V Rising/falling characteristics
Power consumption 0 – 10 V	R_L ≥ 100 Ω at U_B ≥ 15 V short-circuit proof Rising/falling characteristics
Factory setting	Falling characteristic curve, analog output to current 4-20 mA, 4 mA (empty), 20 mA (full), pushbuttons deactivated

NOTE

The specified enclosure rating is contingent on the use of connection sockets and cables suitable for that enclosure rating. If connection sockets and cables with a lower protection rating are used, the lowest of those protection ratings will apply.

Table 18

Electrical connection

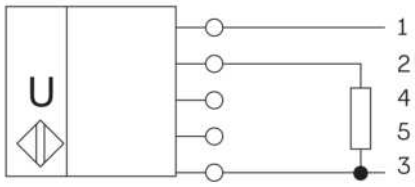

		Cable colors in accordance with IEC 60757
1	+ U_B	Brown (BN)
2	U/I	White (WH)
3	- U_B	Blue (BU)
4		Black (BK)
5	Sync / Com	Gray (GY)

Table 19

Display of the circuit states

Parameter	Switching points D1	Display of the LEDs D1
Object within sensing range	A	Green
Object outside sensing range	B	red

A = switched, B = not switched, C = steady, D = flashing

Dimensions:

Fig. 18

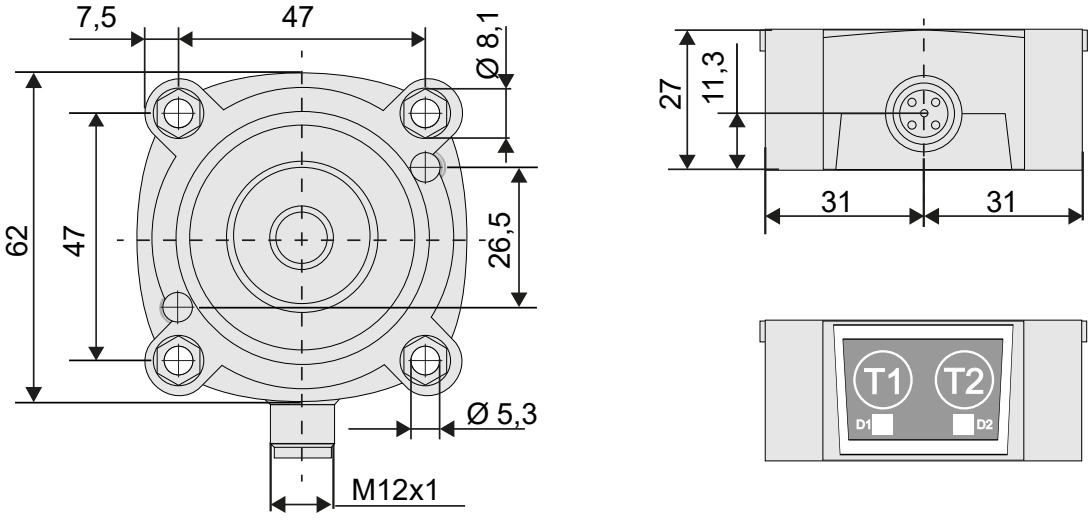

Dimensions

4.8 Reservoir designs

The possible reservoir designs for the pumps described in these instructions can be found below (see also the type identification code). To improve the clarity of the illustrations, only the smallest possible reservoir size is shown in each case. The differences between the reservoir designs may not be visible in the illustrations, as the differences lie in the internal structure (e.g. with and without low-level signal).

4.8.1 Reservoir designs 2-25 liters

Table 20

P203 reservoir designs

		Reservoir size in liters and [gal.]						
Figure	Type	2 [0.53]	4* [1.06]	8* [2.11]	11* [2.9]	15* [3.96]	20* [5.28]	25* [6.60]
1	XNFL	X*	-----	-----	-----	-----	-----	-----
2	XN	X	X	X	-----	X	-----	-----
2	XL	X	X	X	-----	X	-----	-----
2	XC	X	X	X	-----	-----	-----	-----
3	XNBO	X	X	X	X	X	-----	-----
3	XLBO	X	X	X	X	X	-----	-----
3	XCBO	X	X	X	X	X	-----	-----
4	XNBA	-----	X	X	-----	-----	-----	-----
4	XLBA	-----	X	X	-----	-----	-----	-----
4	YLBA	-----	-----	X	-----	-----	-----	-----
4	YABO	-----	X	X	-----	-----	-----	-----
5	XBF	-----	X	X	X	X	-----	-----
5	XPF	-----	-----	X	-----	X	-----	-----
6	YNBO	X	X	X	-----	X	-----	-----
6	YLBO	X	X	X	-----	X	-----	-----
7	BIBO	X	X	-----	-----	-----	-----	-----
7	BABO	-----	-----	X	-----	-----	-----	-----
8	XBD	-----	X	X	-----	X	X	X
8	XBR	-----	X	X	-----	X		

X = available reservoir sizes.
* With these reservoir sizes, the installation of a pressure limiting valve in the pump element requires the adapter 226-14105-5 (see also spare parts).

Table 21

P203 reservoir figures

Fig. 1 XNFL 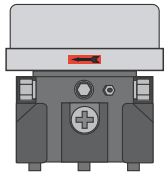	**Fig. 2 XN / XL / XC** 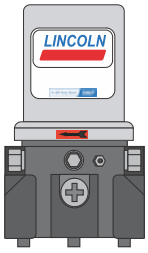	**Fig. 3 XNBO / XLBO / XCBO** 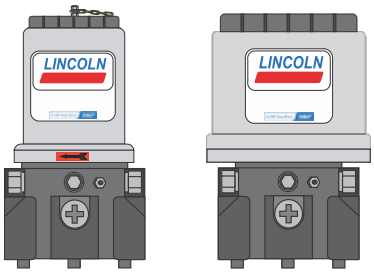
Fig. 4 XNBA / XLBA / YLBA / YABO 	**Fig. 5 XBF / XPF** 	**Fig. 6 YNBO / YLBO** 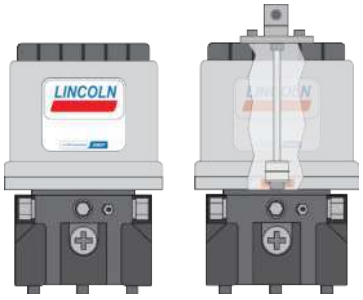
Fig. 7 BIBO / BABO 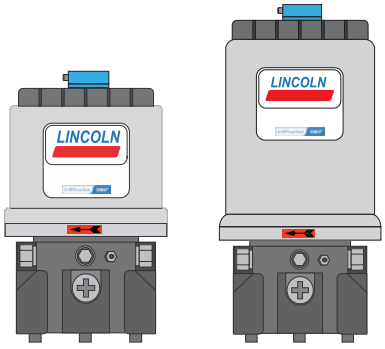	**Fig. 8 XBD / XBR** 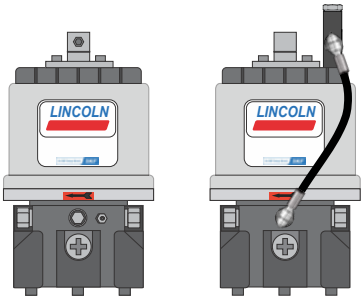	

4.8.2 Reservoir designs 25-60 liters

Table 22

Xx_G and XBxG reservoir designs

Figure	Version	Reservoir size in liters and [gal.] 25 [6.60 gal.]	30 [7.93 gal.]	35 [9.25 gal.]	40 [10.57 gal.]	45 [11.89 gal.]	50 [13.21 gal.]	55 [14.53 gal.]	60 [15.85 gal.]
1	XN_G	----	X	----	X	----	X	----	X
1	XL_G	----	X	----	X	----	X	----	X
1	XC_G	----	X	----	X	----	X	----	X
2	XBDG	X	----	X	----	X	----	X	----
2	XBRG	X	----	X	----	X	----	X	----

X = available reservoir sizes.

Table 23

Figures

Fig. 1 XN_G XL_G XC_G

Fig. 2 XBDG XBRG

4.9 Usable reservoir volume

NOTE

The usable reservoir volume in the reservoir design without follower plate is strongly dependent on the consistency (NLGI Grade) of the lubricant used and the ambient temperature. With high consistency and a low working temperature, more lubricant typically adheres to the inner surfaces of the reservoir and the pump, leaving less lubricant available for feeding.

Table 24

4.9.1 Usable reservoir volume for reservoirs without a follower plate (2 – 15 liters)

Reservoir size in liters and [gal.]	2 [0.53]	4 [1.06]	8 [2.11]	11 [2.90]	15 [3.96]
Lubricants with relatively low consistency [1), 2)]	1.6 - 2.0 [0.42 - 0.53]	3.35 - 3.85 [0.88 - 1.01]	6.65 - 7.15 [1.76 - 1.88]	8.78 - 9.28 [2.32 - 2.45]	14.35 - 14.90 [3.79 - 3.93]
Lubricants with relatively high consistency [3)]	1.8 - 2.0 [0.47 - 0.53]	3.65 - 4.15 [0.96 - 1.10]	7.00 - 7.50 [1.84 - 1.98]	9.13 - 9.63 [2.41 - 2.54]	14.75 - 15.25 [3.90 - 4.03]

1) Consistencies of NLGI 000 lubricants at + 60 °C [140 °F] up to consistencies of NLGI 1.5 lubricants at + 20 °C [68 °F].
2) Consistencies of NLGI 2 lubricants at + 20 °C [68 °F] up to the maximum permissible lubricant consistency.
3) When using lubricants with relatively low consistency in pumps subjected to strong vibrations or tilting motions (e.g., heavy equipment for construction or agriculture), maintain a clearance of about 15 mm [0.59 in.] below the -MAX- mark on the reservoir. This stops lubricant from entering the reservoir bleed screw. In the case of very strong vibrations or large tilting motions, this value must be increased, and can be reduced in the case of lesser vibrations. Changing the filling height by 10 mm [0.4 in.] equates to a change in volume of approx. 0.34 liters [0.09 gal.].

Table 25

4.9.2 Usable reservoir volume for reservoirs with a follower plate (4 – 15 liters)

Reservoir size in liters and [gal.]	4 [1.06]	8 [2.11]	11 [2.90]	15 [3.96]
Usable reservoir volume	3.0 [0.66]	6.4 [1.41]	11.5 [2.53]	15.4 [3.39]

Table 26

4.9.3 Usable reservoir volume for reservoirs with double-lip follower plate (4 – 25 liters)

Reservoir size in liters and [gal.]	4 [1.06]	8 [2.11]	15 [2.90]	20 [4.40]	25 [5.50]
Usable reservoir volume	1.9 [0.42]	5.4 [1.19]	13.9 [3.06]	20.1 [4.42]	25.1 [5.52]

Table 27

4.9.4 Usable reservoir volume for Xx_G reservoirs (without a follower plate/ 30 - 60 liters)

Reservoir size in liters and [gal.]	30 [7.93]	40 [10.57]	50 [13.21]	60 [15.85]
Usable reservoir volume from MIN to MAX marking	30 [7.93]	40 [10.57]	50 [13.21]	60 [15.85]

Table 28

4.9.5 Usable reservoir volume for XBxG reservoirs (with double-lip follower plate / 25 - 55 liters)

Reservoir size in liters and [gal.]	25 [6.60]	35 [9.25]	45 [11.89]	55 [14.53]
Usable reservoir volume from MIN to MAX marking	25 [6.60]	35 [9.25]	45 [11.89]	55 [14.53]

4.10 Lubricant volume when an empty pump is filled for the first time

The following volumes of lubricant are required in order to fill a new empty pump up to the -MAX- mark on the reservoir.

NOTE

The difference between the lubricant volume required for initial filling and the nominal volume of the reservoir is due to the filling of the space in the pump housing up to the -MIN- mark on the reservoir.

Table 29

Lubricant volume when an empty pump is filled for the first time (liters / [gal.])

Reservoir design							
Nominal volume	2 [0.53]	4 [1.06]	8 [2.11]	11 [2.90]	15 [3.96]	20 [5.28]	25 [6.60]
Reservoir without follower plate	3.80 ± 0.25 [1 ± 0.07]	5.80 ± 0.25 [1.53 ± 0.07]	9.15 ± 0.25 [2.41 ± 0.07]	12.85 ± 0.25 [2.83 ± 0.07]	17.50 ± 0.25 [4.62 ± 0.07]	------	------
Reservoir with follower plate	------	3.30 ± 0.25 [0.87 ± 0.07]	7.00 ± 0.25 [1.85 ± 0.07]	9.15 ± 0.25 [2.01 ± 0.07]	15.00 ± 0.25 [3.96 ± 0.07]	------	------
Reservoir with double-lip follower plate	------	2.90 ± 0.25 [0.77 ± 0.07]	6.4 ± 0.25 [1.69 ± 0.07]	------	14.0 ± 0.25 [3.70 ± 0.07]	18.5 ± 0.25 [4.89 ± 0.07]	25.3 ± 0.25 [6.68]

Table 30

Lubricant volume when an empty pump is filled for the first time, with Xx_G or XBxG reservoir

Reservoir design	**Xx_G** (reservoir without a follower plate)				**XBxG** (Reservoir with double-lip follower plate)			
Nominal volume in liters [gal.]	30 [7.93]	40 [10.57]	50 [13.21]	60 [15.85]	25 [6.60]	35 [9.25]	45 [11.89]	55 [14.53]
Required lubricant volume	Nominal volume lus 4+0.5 liters [1.06+0,13 gal.]							

4.11 Tightening torques

Table 31

Tightening torques

	Component	Tightening torque
1	Pump element on pump	20 Nm ± 2.0 Nm [14.75 ft.lb. ± 1.4 ft.lb.]
2	Pressure limiting valve on pump element	6 Nm - 0.5 Nm [4.43 ft.lb. - 0.37 ft.lb.]
3	Fastening the pump	18 Nm ± 1.0 Nm [13.27 ft.lb. ± 0.74 ft.lb.]
4	Housing cover (bottom) when replacing	0.75 Nm ± 0.1 Nm [0.55 ft.lb. ± 0.07 ft.lb.]
5	Plug screw or adapter with cone-type grease nipple	10 Nm + 1.0 Nm [7.38 ft.lb. ± 0.74 ft.lb.]
6	Screw cap	2 Nm ± 0.2 Nm [1.48 ft. lb. ± 0.15 ft.lb.]
7	Optional fill connection	20 Nm ± 2.0 Nm [14.75 ft.lb. ± 1.4 ft.lb.]
8	Rectangular connector, M3 screw	0.5 Nm [0.37 ft.lb.]
	Not shown	
	Ultrasonic sensor (for BIBO-, BABO-reservoirs)	1.5 Nm ±0.2 Nm [1.11 ft.lb. ±0.15 ft.lb.]
	M12 connector	6 Nm ± 0.5 Nm [4.43 ft.lb. ± 0.37 ft.lb.]

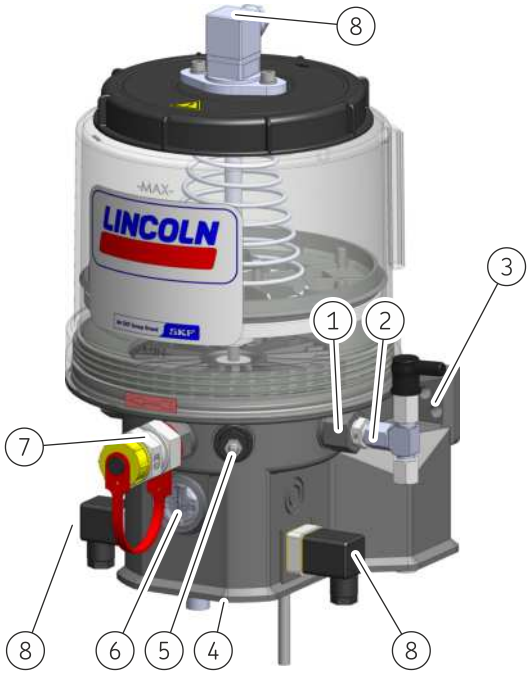

4.12 Type identification code

4.12.1 Basic parameters and reservoir design

P203 _ _ - _8 X N BO - xxx - xx - xx xx xx xx - ___ x xxxx

Type series:

P203 P203 pump for grease or oil with 1 - 3 outlet ports and DC motor

Corrosion protection class:

_ C3 design
X C5-M design

Conformity[1]:

_ CE/UKCA
D CE/UKCA+E1 (ECE10)+UL/CSA
E CE/UKCA+E1 (ECE10)
U CE/UKCA+ UL/CSA

Reservoir capacity (liters):

_2 _4 _8 11 15 20 25

Reservoir capacity[2] (liters)
25 30 35 40 45 50 55 60

Lubricant*:

X Reservoir for grease
Y Reservoir for oil
B Reservoir for grease or oil

Fill level signal*:

N Standard design (without low-level signal)
L[3] Intermittent low-level signal as NO contact
B Full & low-level signals, steady light
A[4] Low-level signal, analog
I[5] Full & low-level signals as inverted signals (ultrasonic sensor)
C Intermittent low-level signal as NC contact
P Full & low-level signals & pre-warning

Reservoir design*:

BO Filling from above
BA Filling from above, lockable cover
FL Flat reservoir
F_ With follower plate (standard)
D_ With double-lip follower plate
R_[6] With double-lip follower plate and MSOD mechanical shut-off device
_G Reservoir capacity 25–60 liters

* For possible combinations, see Table 32; [1] features “D” and “E” not available for V AC pumps; feature “U” not available for V DC pumps [2] coding _G for the reservoir design; [3] intermittent in the case of grease, float switch in the case of oil;[4] sonar sensor in the case of grease, float switch in the case of oil; [5] only for reservoirs with filling from above; [6] MSOD mechanical shut-off device only for reservoirs with double-lip follower plate; versions: MSOD EU-version (1/4″ thread) **without the entry “-A”**, MSOF US-version (SAE thread) **with the entry “-A”** in the additional specifications (after the coding for the grease filling).

Table 32

Reservoir designs 2–25 liters

Code	Reservoir capacities (l) 2	4	8	11	15	20	25	Reservoir characteristics
X N _ _	√	√	√		√			Reservoir for grease; without low-level signal (standard design)
X N F L	√							Flat reservoir for grease; without low-level signal
X N B O	√	√	√	√	√			Reservoir for grease; filling from above; without low-level signal
X N B A		√	√					Reservoir for grease; filling from above; lockable cover; without low-level signal
X L _ _	√	√	√		√			Reservoir for grease; low-level signal as NO contact
X L B O	√	√	√	√	√			Reservoir for grease; low-level signal as NO contact; filling from above
X L B A		√	√					Reservoir for grease; low-level signal as NO contact; filling from above; lockable cover
X C _ _	√	√	√		√			Reservoir for grease; low-level signal as NC contact
X C B O	√	√	√	√	√			Reservoir for grease; low-level signal as NC contact; filling from above
X C B A		√	√					Reservoir for grease; filling from above; lockable cover; low-level signal as NC contact
X B F _		√	√	√	√			Reservoir for grease with full/low-level signals and follower plate
X P F _			√		√			Reservoir for grease with full/low-level signals plus pre-warning; with follower plate
X B D _		√	√		√	√	√	Reservoir for grease with full/low-level signals and double-lip follower plate
X B R _		√	√		√			Reservoir for grease with full/low-level signals and double-lip follower plate; mechanical shut-off device (MSOD)
Y N B O	√	√	√		√			Reservoir for oil; without low-level signal; filling from the top
Y N B A		√	√					Reservoir for oil; without low-level signal; filling from above; lockable cover
Y L B O	√	√	√		√			Reservoir for oil; low-level signal (float switch); filling from above
Y L B A			√					Reservoir for oil; low-level signal (float switch); filling from above; lockable cover
Y A B O		√	√					Reservoir for oil; analog low-level signal; filling from the top
B I B O	√	√						Reservoir for grease or oil; full/low-level signals (ultrasonic sensor with inverted signals); filling from above
B A B O			√					Reservoir for grease or oil; analog low-level signal; filling from the top

Reservoir designs 25–60 liters

Code	Reservoir capacities (l) 25	30	35	40	45	50	55	60	Reservoir characteristics
X N _ G		√		√		√		√	Reservoir for grease; without low-level signal (standard design)
X L _ G		√		√		√		√	Reservoir for grease; low-level signal as NO contact
X C _ G		√		√		√		√	Reservoir for grease; low-level signal as NC contact
X B D G	√		√		√		√		Reservoir for grease with full/low-level signals and double-lip follower plate
X B R G	√		√		√		√		Reservoir for grease with full/low-level signals and double-lip follower plate; mechanical shut-off device (MSOD)

4.12.2 Pump elements

P203 x x - xx x x xx - 70R - xx - xx xx xx xx - ___ x xxxx

Pump elements:
Position sequence: Right (Fig. 19/1), Center (Fig. 19/2) and Left (Fig. 19/3). For coding, see Table 33

Fig. 19

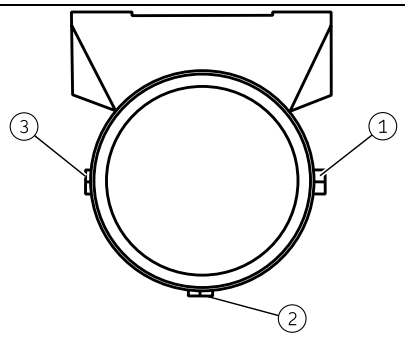

Layout of pump elements

Table 33

Pump elements[1)]

Code	Description	
0	Without/no pump element	
5	Piston diameter = 5 mm	
L	Piston diameter = 5 mm; delivery rate 0.03 ccm (only suitable for grease of NLGI Grade 00)	
6	Piston diameter = 6 mm	
7	Piston diameter = 7 mm	
R	Piston diameter = 7 mm, adjustable pump element	
B	Piston diameter = 7 mm, delivery volume equivalent to pump element 5 (piston diameter = 5 mm)	
C	Piston diameter = 7 mm, for chisel paste	
Thread:	Connection	Outlet (lubrication line)
	M22x1.5	G1/4″

[1)]In this category, it is always necessary to make more than one selection.

4.12.3 Power supply and electrical connections

The P203 has four different possible connection points on the housing. These different connection points are coded in the type identification code with four two-digit numbers.

- The first digit in a two-digit number indicates the plug/socket on the housing.
- The second digit in the two-digit number specifies the accompanying plug/socket with/without cable.

P203 x x - xx x x xx - xxx - 24 - 00 6F 00 N0 - ___ x xxxx

Power supply:
12 12 VDC*
24 24 VDC

Housing position: (Combination of the versions: see Tables **34** and **35**)
Bottom left
Top left
Bottom right
Top right

*12 VDC supply not possible with control circuit boards MS8 and MS9

Table 34

Possible connection types for circuit boards M00–M23:

Housing position									
Left				Right					
Bottom		Top		Bottom		Top			
I	II	I	II	I	II	I	II	Description	
								Coding and connection on the pump housing (I):	
0	-	0	-	0	-	0	-	0	No connection
3	-	-	-		-	-	-	3	Superseal connector, 5-in
-	-	-	-	4	-	-	-	4	Superseal connector, 4-in
-	-	6	-	-	-	-	-	6	Bayonet connector, 7/5-pin
-	-	-	-	-	-	N	-	N	Bayonet connector, 4/4-pin
								Coding and accessories for connection (II):	
-	0	-	0	-	0	-	0	0	Without connection socket, without cable
-	3	-	-	-	-	-	-	3	Superseal socket and 10 m cable, 4-core
-	4	-	-	-	-	-	-	4	Superseal socket and 10 m cable, 5-core
-	-	-	F	-	-	-	-	F	With bayonet socket and 10m cable, 7/5-core
-	-	-	-	-	-	-	K	K	With bayonet socket and 10m cable, 4/4-core

Table 35

Possible connection types for circuit boards MS8:

Housing position									
Left				Right					
Bottom		Top		Bottom		Top			
I	II	I	II	I	II	I	II	Description	
								Coding and connection on the pump housing:	
0	-	-	-	0	-	-	-	0	No connection
-	-	-	-	-	-	N	-	N	Bayonet connector, 4/4-pin
-	-	U	-	-	-	-	-	U	Bayonet connector 7/7-pin
								Coding and accessories for connection:	
-	0	-	-	-	-	-	0	0	Without connection socket, without cable
-	-	-	G	-	-	-	-	G	With bayonet socket and 10m cable, 7/7core
-	-	-	-	-	-	-	K	K	With bayonet socket and 10m cable, 4/4core

4.12.4 Control, lubricant, and additional specifications

P203 x x - xx x x xx - xxx - xx - xx xx xx xx - Mxx A +ZUB.

Control circuit boards:
M00 to M23 or MS8-MS9: depending on the type and function of the control circuit boards used

Lubricant:

A[1]	Standard grease (SKF LGCC 2)
S	Customized filling
Z	Without lubricant

Additional specifications:

-ADR	For hazardous goods transportation
-A	Version for USA, adapter with grease fitting with/without SV (pressure limiting valve), both NPT thread
-A+SV	Version for USA, adapter with grease fitting with SV (pressure limiting valve), both NPT thread
+ZUB.	With customized accessories

[1] Filled with the following amounts, according to the reservoir design:
– Pumps without follower plate – 2l reservoir approx. 0.75 kg [1.65 lbs], 4l / 8l / 15l reservoir approx. 1.5 kg [3.30 lbs]
– Pumps with follower plate – 4l /8l reservoir approx. 2.0 kg [4.40 lbs], 15l / 20l / 25l reservoir approx. 2.5 kg [5.50 lbs]
– Pumps with reservoir design XxxG – 25l-60l reservoir approx. 4.5 kg [9.90 lbs]
Technical Data SKF LGCC 2 see section 4.13.

NOTE

The control circuit boards M00-M23 and MS8-MS9 have different functionality. However, the following applies to all circuit boards:

- The lubrication time can be adjusted using a rotary switch, in 8-second- or 2-minute increments. In the factory setting, the switch is in position 3 = 24 seconds or 6 minutes.
- The pause time can be adjusted using a rotary switch, in 4-minute or 1-hour increments. In the factory setting, the switch is in position 6 = 24 minutes or 6 hours.

4.13 Standard grease KF LGCC 2

Features

SKF LGCC 2 is a multi-purpose grease that has been specially designed to provide outstanding performance in a broad range of lubrication systems. It performs especially well in environments with very low temperatures. Its advanced composition ensures excellent water resistance and long-lasting corrosion protection.

Table 36

Technical data SKF LGCC 2

Features	Unit	Value	Standard
Marking	--	K 1/2 G-50	DIN 51825
	--	ISO-L-X-EBIA 1/2	ISO 6743-9
NLGI grade	--	1-2	DIN 51818
Thickener	--	Calcium-12-OH	--
Base oil type	--	Mineral	--
Color	--	Light brown	--
Base oil viscosity	mm^2/s	110 at 40 °C (104 °F)	--
		9 at 100 °C (212 °F)	--
Temperature range	°C (°F)	-50 to 100 (-58 to +212)	-
Drop point	°C (°F)	>135 (275)	DIN ISO 2176
Flow pressure	mbar	<1400 at -50 °C (-58 °F)	DIN 51805/2
Penetration			
-At 60 strokes	mm/10	300-325	DIN ISO 2137
-At 100,000 strokes		+70 max.	
Corrosion protection	--	0-0	ISO 11007
Water resistance	h	3 at 90 °C (194 °F) 1 max.	DIN 51807/1
Copper corrosion	--	1 max.	DIN 51811 / ASTM D4048 / ISO 2160
Performance with extreme pressure (4-ball weld load)	N	Min. 2000	DIN 51350/4

NOTE

The lubricant filling of the pump is determined by the coding in the type identification code (see section 4.12.4).

5 Delivery, returns, storage

5.1 Delivery

After receipt of the shipment, it must be inspected for any shipping damage and for completeness according to the shipping documents. Immediately inform the transport carrier of any shipping damage. The packaging material must be preserved until any discrepancies are resolved.

5.2 Return shipment

Before return shipment, all contaminated parts must be cleaned. If this is not possible or practical, e.g. if it would impede fault detection in the case of complaints, the medium used must always be specified. In the case of products contaminated with hazardous substances as defined by GHS or CLP regulations, the safety data sheet (SDS) must be sent with the product and the packaging must be labelled in accordance with GHS/CLP. There are no restrictions for land, air, or sea transport. The choice of packaging should be based on the specific product and the stresses to be expected during transport (e.g., necessary anti-corrosion measures in the case of shipment by sea). In the case of wooden packaging, the applicable import regulations and the IPPC standards must be observed. Required certificates must be included in the shipping documents. The following information, as a minimum, must be marked on the packaging of return shipments.

Fig. 20

Marking of return shipments

5.3 Storage

The following conditions apply to storage:

- Dry, low-dust, vibration-free, in closed rooms
- No corrosive, aggressive substances at the storage location (e.g., UV rays, ozone)
- Protected against animals (insects, rodents)
- If possible, keep in the original product packaging
- Protected from nearby sources of heat or cold
- In the case of large temperature fluctuations or high humidity, take appropriate measures (e.g., heating) to prevent the condensation of water
- Before usage, check products for damage that may have occurred during storage. This applies in particular to parts made of plastic (due to embrittlement).

5.4 Storage temperature range

For parts not filled with lubricant, the permitted storage temperature is the same as the permitted ambient temperature range (see “Technical data”).

5.5 Storage conditions for products filled with lubricant

For products filled with lubricant, the permitted storage temperature range is:

minimum	+ 5 °C	[+41 °F]
maximum	+ 35 °C	[+95 °F]

If the storage temperature range is not maintained, the following steps for replacing the lubricant may not lead to the desired result under certain circumstances.

5.5.1 Storage period up to 6 months

Filled products can be used without implementing additional measures.

5.5.2 Storage period between 6 and 18 months

Pump:

- Connect the pump to a power source
- Switch on the pump and run it until lubricant comes out of every outlet without air bubbles
- Disconnect the pump from the power source
- Remove and dispose of the lubricant that came out

Lines:

- Remove pre-installed lines
- Ensure that both ends of the line are open
- Fill the lines completely with fresh lubricant

Metering devices:

NOTE

Due to the large number of different metering devices, no universally valid statement can be made regarding the removal of the old lubricant and correct bleeding after filling with new lubricant. The instructions can be found in the technical documentation of the specific metering device used.

5.5.3 Storage period more than 18 months

To prevent faults, the manufacturer should be consulted before start-up. The basic procedure for removal of the old lubrication filling corresponds to that for storage periods between 6 and 18 months.

5.6 Declaration of decontamination

If the product came in contact with harmful substances, make sure to thoroughly clean the product before returning it to us. Due to statutory provisions and for the safety of our employees and operation facilities we further need a fully completed and signed “Declaration of decontamination”.

6 Assembly

6.1 General safety instructions

Observe the safety instructions and the technical data in this manual. Additionally, during assembly pay attention to the following:

- Only qualified and authorized technical personnel may install the products described in this manual.
- Adhere to safety distances and legal prescriptions on assembly and prevention of accidents.
- Possibly existing visual monitoring devices, e.g. pressure gauges, MIN/MAX markings, oil inspection glasses must be clearly visible.
- Protect the product against humidity, dust and vibrations.
- Install the product in an easily accessible position. This facilitates other installations, control and maintenance work.

6.2 Transporting the pumps

⚠ CAUTION

Injury or pump damage due to improper securing or handling when transporting to the installation location

- During transportation, secure the pump against unintended changes of position, e.g., tilting or falling
- Transport only on marked routes, using suitable transport and lifting gear, including securing straps if necessary.

NOTE

The pumps listed in these instructions may be transported only in a vertically position when filled, because otherwise lubricant could escape from the reservoir and could enter the reservoir ventilation and clog it up.

NOTE

Pumps with reservoir version Xx_G and XBxG
Material damage

Pumps with the reservoir version Xx_G and XBxG must not be placed on the pump housing when filled. Failure to do so may result in damage to the bayonet catch between the housing and the reservoir. When transporting and installing the pump, use the lifting eyes on the top of the pump with suitable lifting gear.

6.3 Mechanical connection

6.3.1 Minimum mounting dimensions

In order to have sufficient space for maintenance work or for the attachment of additional components for the construction of a centralized lubrication system on the pump, sufficient clearance should be provided for in every direction in addition to the specified dimensions.

Fig. 21

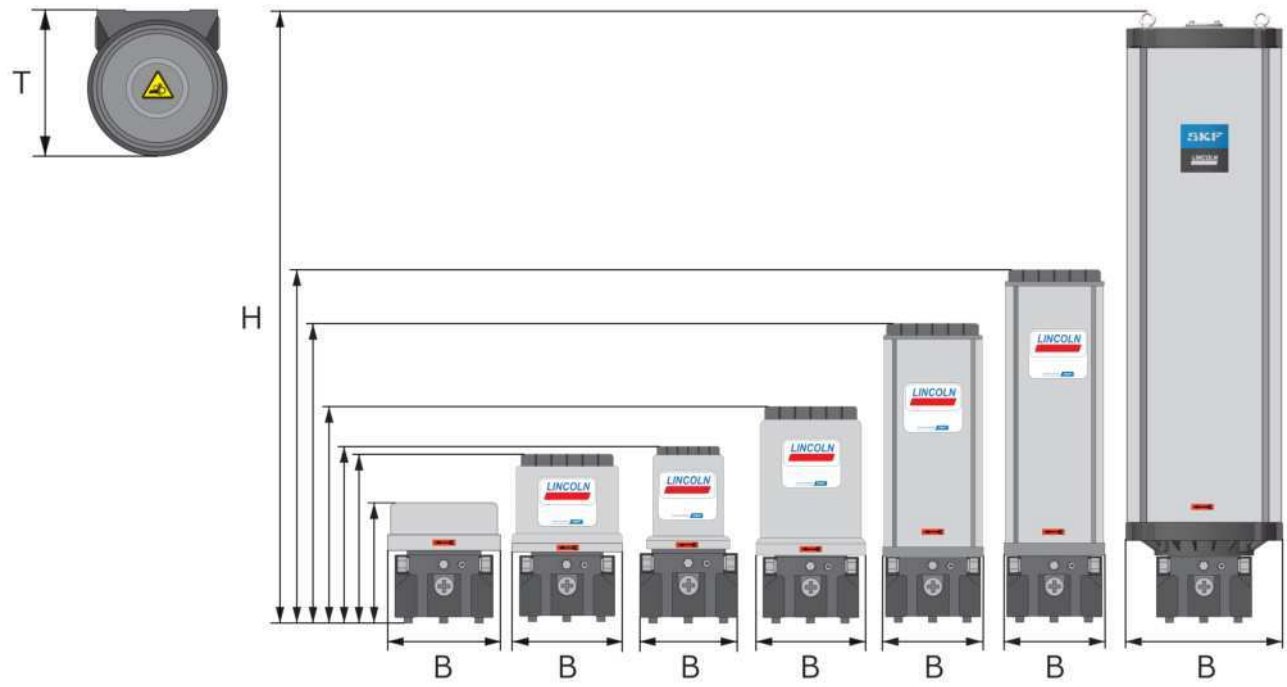

Minimum mounting dimensions

Table 37

Minimum mounting dimensions P203 with 2-15 liter reservoir designs

Reservoir design	Approx. height (H) mm [in.]					Approx. width (B) mm [in.]					Approx. depth (T) mm [in.]				
liters gal.	2 [0.53]	4 [1.06]	8 [2.11]	11 [2.90]	15 [3.96]	2 [0.53]	4 [1.06]	8 [2.11]	11 [2.90]	15 [3.96]	2 [0.53]	4 [1.06]	8 [2.11]	11 [2.90]	15 [3.96]
XN	325 [12.80]	355 [13.98]	458 [18.03]	------	708 [27.87]	213 [8.39]	230 [9.06]	250 [9.84]	------	240 [9.45]	224 [8.81]	250 [9.84]	250 [9.84]	------	244 [9.60]
XNFL	244 [9.61]	------	------	------	------	232 [9.13]	------	------	------	------	250 [9.84]	------	------	------	------
XNBO	360 [14.17]	350 [13.78]	457 [18]	611 [24.06]	729 [28.7]	211 [8.30]	232 [9.13]	232 [9.13]	227 [8.93]	216 [8.50]	224 [8.82]	250 [9.84]	250 [9.84]	224 [8.82]	244 [9.61]
XNBA	------	360 [14.17]	467 [18.36]	------	------	------	250 [9.84]	230 [9.06]	------	------	------	250 [9.84]	251 [9.88]	------	------
XL	330 [13]	355 [13.98]	465 [18.30]	------	729 [28.70]	213 [8.30]	230 [9.06]	230 [9.06]	------	230 [9.06]	224 [8.82]	250 [9.84]	250 [9.88]	------	250 [9.88]
XLBO	360 [14.17]	355 [13.98]	457 [17.99]	618 [24.33]	730 [28.74]	213 [8.30]	250 [9.84]	230 [9.06]	220 [8.66]	220 [8.66]	224 [8.82]	250 [9.84]	251 [9.88]	250 [9.84]	244 [9.61]
XLBA	------	365 [14.37]	467 [18.39]	------	------	------	250 [9.84]	230 [9.06]	------	------	------	250 [9.84]	251 [9.88]	------	------
XC	325 [12.80]	355 [13.98]	458 [18.03]	------	------	213 [8.30]	230 [9.06]	250 [9.84]	------	------	224 [8.82]	251 [9.88]	250 [9.84]	------	------
XCBO	360 [14.17]	380 [14.96]	482 [18.97]	618 [24.33]	730 [28.74]	213 [8.30]	250 [9.84]	230 [9.06]	220 [8.66]	220 [8.66]	224 [8.82]	250 [9.84]	251 [9.88]	250 [9.84]	244 [9.61]

Table 37 (continued)

Minimum mounting dimensions P203 with 2-15 liter reservoir designs

Reservoir design	Approx. height (H) mm [in.]					Approx. width (B) mm [in.]					Approx. depth (T) mm [in.]				
liters gal.	2 [0.53]	4 [1.06]	8 [2.11]	11 [2.90]	15 [3.96]	2 [0.53]	4 [1.06]	8 [2.11]	11 [2.90]	15 [3.96]	2 [0.53]	4 [1.06]	8 [2.11]	11 [2.90]	15 [3.96]
XBF	------	408 [16.06]	498 [19.61]	611 [24.06]	785 [30.91]	------	232 [9.13]	251 [9.88]	227 [8.93]	227 [8.93]	------	250 [9.84]	260 [10.24]	244 [9.61]	244 [9.61]
XPF	------	------	498 [19.61]	------	785 [30.91]	------	------	498 [19.61]	------	785 [30.91]	------	------	260 [10.24]	------	244 [9.61]
YNBO	360 [14.17]	350 [13.78]	457 [18]	------	729 [28.7]	211 [8.30]	232 [9.13]	232 [9.13]	------	216 [8.50]	224 [8.82]	250 [9.84]	250 [9.84]	------	244 [9.61]
YLBO	360 [14.17]	398 [15.67]	510 [20.08]	------	785 [30.91]	213 [8.30]	230 [9.06]	250 [9.84]	------	227 [8.93]	224 [8.82]	250 [9.84]	250 [9.84]	------	244 [9.61]
YLBA	------	------	500 [19.69]	------	------	------	------	250 [9.84]	------	------	------	------	250 [9.84]	------	------
YABO	------	350 [13.78]	457 [18]	------	------	------	232 [9.13]	232 [9.13]	------	------	------	250 [9.84]	250 [9.84]	------	------
BIBO	387 [15.22]	384 [15.12]	------	------	------	211 [8.30]	229 [9,02]	------	------	------	224 [8.82]	250 [9.84]	------	------	------
BABO	------	------	485 (19.09)	------	------	------	------	254 (10)	------	------	------	------	252 (9.92)	------	------

Table 37 (continued)

Minimum mounting dimensions P203 with 4-25 liter reservoir designs (with double-lip follower plate)

Reservoir design	Approx. height (H) mm [in.]					Approx. width (B) mm [in.]					Approx. depth (T) mm [in.]				
liters gal.	4 [1.06]	8 [2.11]	15 [3.96]	20 [5.28]	25 [6.60]	4 [1.06]	8 [2.11]	15 [3.96]	20 [5.28]	25 [6.60]	4 [1.06]	8 [2.11]	15 [3.96]	20 [5.28]	25 [6.60]
XBD	406 [15.98]	507 [19.96]	783 [30.82]	965 [38.0]	1147 [45.16]	224 [8.82]	224 [8.82]	224 [8.82]	224 [8.82]	224 [8.82]	242 [9.53]	242 [9.53]	242 [9.53]	242 [9.53]	242 [9.53]
XBR	438 [17.24]	539 [21.22]	815 [30.09]	------ ------	------ ------	224 [8.82]	224 [8.82]	224 [8.82]	------ ------	------ ------	242 [9.53]	242 [9.53]	242 [9.53]	------ ------	------ ------

Table 37 (continued)

Minimum mounting dimensions P203 with 25-60 liter reservoir designs (with/without double-lip follower plate)

Reservoir design	Approx. height (H) mm [in.]				Approx. width (B) mm [in.]				Approx. depth (T) mm [in.]			
liters gal.	25/30 [6.60/ 7.93]	35/40 [9.25/ 10.57]	45/50 [11.89/ 13.21]	55/60 [14.53/ 15.85]	25/30 [6.60/ 7.93]	35/40 [9.25/ 10.57]	45/50 [11.89/ 13.21]	55/60 [14.53/ 15.85]	25/30 [6.60/ 7.93]	35/40 [9.25/ 10.57]	45/50 [11.89/ 13.21]	55/60 [14.53/ 15.85]
XBDG / XL_G	830 [32.68]	980 [38.58]	1200 [47.24]	1350 [53.15]	340 [13.39]	340 [13.39]	340 [13.39]	340 [13.39]	330 [12.99]	330 [12.99]	330 [12.99]	330 [12.99]
XBRG	916 [36.06]	1066 [41.97]	1286 [50.63]	1436 [56.54]	340 [13.39]	340 [13.39]	340 [13.39]	340 [13.39]	330 [12.99]	330 [12.99]	330 [12.99]	330 [12.99]

6.3.2 Assembly holes

NOTICE

Damage to the main machine and the pump

The assembly holes should be created only on non-load-bearing parts of the main machine. Do not fasten on two parts which move in opposite directions to one another (e.g., machine base and machine assembly).

When installing pumps with reservoirs of 11 l [2.9 gal.] or greater, the flatness of the upper and lower installation surfaces must not vary by more than 1 mm [0.039 in.] from one another.

The pump housing is fastened at the assembly holes using:

- 2 or 3 screws M8 (8.8)
- 2 or 3 hexagon nuts M8 (8.8)
- 2 or 3 washers (8)

Diameter of the holes:
∅ 9 mm [0.35 in.]

Pumps with 2 l [0.53 gal] reservoir:
The pumps are fastened at the two lower fastening points (Fig. 22/1) or (Fig. 22/2) of the pump housing:
A1 = 162 mm [6.38 in.]
B1 = 180 mm [7.09 in.]
A2 = 124 mm [4.88 in.]
B2 = 112 mm [4.41 in.]

Pumps with 2 l flat reservoir [0.53 gal] or 4 l [1.06 gal], 8 l [2.11 gal], 11 l [2.90 gal], or 15 l [3.96 gal] reservoir:
The pumps are fastened at the three lower fastening points (Fig. 22/1) or (Fig. 22/2) and (Fig. 22/3) of the pump housing:
C1 = 83 mm [3.27 in.]
C2 = 95 mm [3.74 in.]

Fig. 22

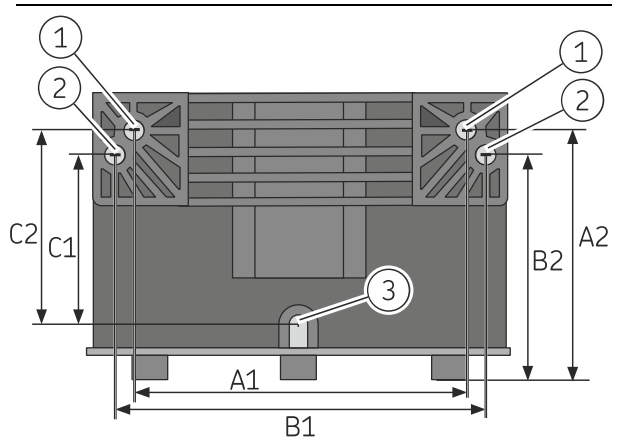

Fastening points at the bottom of the pump housing

Pumps with 11 l [2.90 gal] or 15 l [3.96 gal] reservoir:
The pumps are fastened at the three lower fastening points (Fig. 22/1) or (Fig. 22/2) and (Fig. 22/3) of the pump housing and also at 2 upper assembly points (D):

Fig. 23

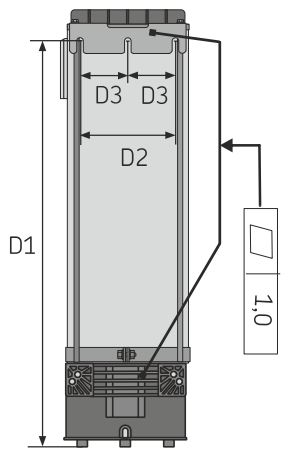

Assembly holes at the top of pumps with 11 l and 15 l reservoirs

The mounting bracket at the top is fastened using:

- 2 screws M8 (8.8)
- 2 hexagon nuts M8 (8.8)
- 2 washers (8)

Tightening torque: 18 Nm ± 1.0 Nm [13.27 ft.lb. ± 0.74 ft.lb.]

Diameter of the holes on the top mounting bracket:
∅ 9 mm [0.35 in.]

With 11 l [2.90 gal] reservoir:
D1 = 557 mm [21.93 in]
D2 = 160 mm [6.30 in.]
D3 = 80 mm [3.15 in.]

With 15 l [3.96 gal] reservoir:
D1 = 675 mm [26.57 in.]
D2 = 160 mm [6.30 in.]
D3 = 80 mm [3.15 in.]

6.3.3 Assembly holes for 15 l, 20 l, and 25 l reservoirs

NOTE
The pump is fastened using 2 fastening points at the bottom of the pump housing and 1 fastening plate (15 l) or 2 fastening plates (20 l and 25 l) in the pump's aluminum profile. The fastening plates are included separately with the pump and must be installed by the customer.

Installing the fastening plates:
The fastening plates (**Z**) are installed in the pump's aluminum profile using the fastening hardware included with the pump.
For each fastening plate:
- 4 x hexagon head screws M8x12 (8.8) A4 DIN EN ISO 4017
- 4 x T-slot nuts M8 A2 10M with spring leaf DIN 508
- 4 x washers A4 8 200 HV

Loctite 274 or equivalent is used to secure the screws.

Tightening torque: 15 Nm ± 1.5 Nm
[11.1 ft.lb. ± 1.1 ft.lb.]

Installing the pump:
The pump must be installed on the main machine using fastening hardware provided by the customer.
For each hole:
- Screw M8 (8.8)
- Hexagon nut M8 (8.8)
- Washers 8 200 HV

Diameter of the holes:
∅ 9 mm [0.35 in.]

Tightening torque: 18 Nm ± 1.0 Nm
[13.27 ft.lb. ± 0.75 ft.lb.]

Table 38

Assembly holes

Reservoir size	A	B	C	Unit
15l	555	---	---	mm
20l	737	367	370	mm
25l	920	455	465	mm

Fig. 24

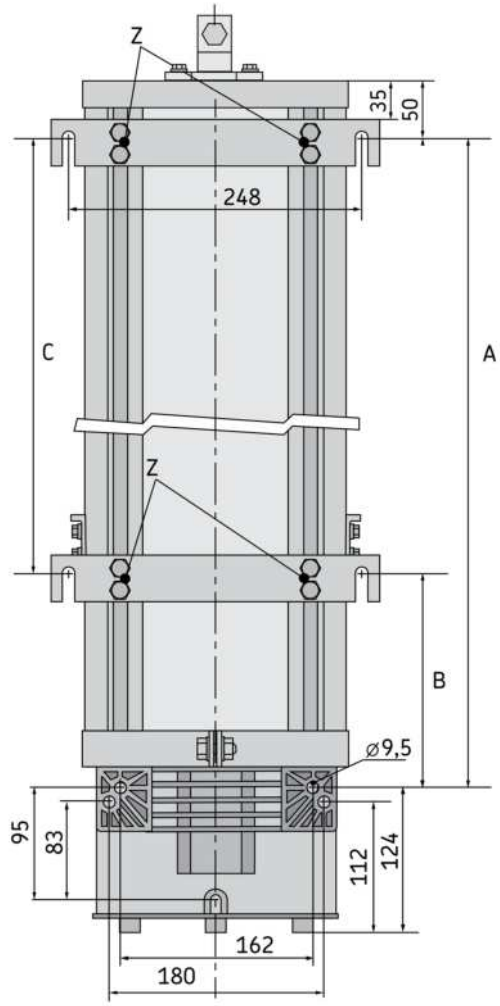

Assembly holes for 15 l, 20 l, and 25 l reservoirs

6.3.4 Assembly holes for Xx_G and XBxG reservoirs (25-60 liter)

NOTE
Lifting lugs come as a standard feature on pump versions Xx_G and XBxG.

Installing the pump:
The pump is installed on the main machine using the 4 fastening points (Fig. 25/1) on the pump reservoir, together with 1 or 2 fastening plates (Fig. 25/2) depending on the size of the reservoir.

Fastening material to be provided by the customer for each hole:
- Screw M10 (8.8)
- Hexagon nut M10 (8.8)
- Washers 10 200 HV

Diameter of the holes:
∅ 11 mm [0.43 in.]

Tightening torque: 49 Nm ± 1.0 Nm
[36 ft.lb. ± 0.75 ft.lb.]

Table 39

Assembly holes

		mm	
Reservoir size	**A**	**B**	**C**
25l / 30l	581	----	----
35l / 40l	726	360	----
45l / 50l	946	315	630
55l / 60l	1096	360	720

Fig. 25

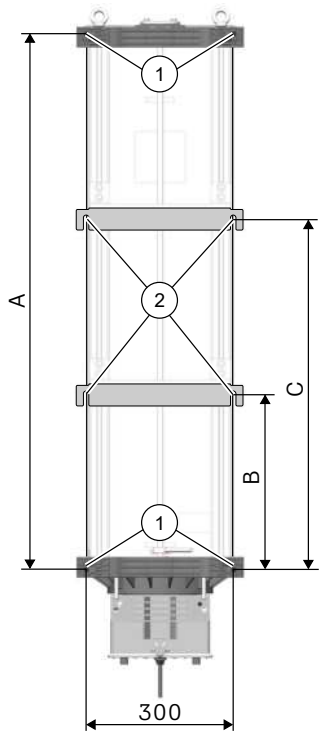

Assembly holes P203 with Xx_G- / XBxG reservoir

6.4 Electrical connection

⚠ WARNING

Electric shock

Work on electrical components may be performed only by qualified electricians.

At a minimum, the following safety measures must be taken before any work on electrical components is done:

- Isolate, lock and tag out
- Check to ensure the absence of voltage
- Ground and short-circuit the product
- Cover any live parts in the surrounding area

Observe the following instructions for a safe connection:

- The electrical connection must be implemented in accordance with the specifications of the standards of the DIN VDE 0100 series or of the standards of the IEC 60364 series, respectively.
- Connect the electrical lines in such a way that no mechanical forces are transferred to the product.
- The pump must be secured with a suitable external fuse (see terminal diagram).

The electrical connection is established in accordance with the type of connection of the specific pump.

1. Assemble the required cables in accordance with the respective connection diagram or use preassembled cables for the connection.
2. Connect plugs with their respective bushes and secure them against becoming loose using the type of securing method specified for the quick disconnect couplings. Only this way is a safe connection and compliance with the enclosure rating secured.

NOTE

Connect the cables in such a way that no tensile forces can be transferred to the product.

Fig. 26

Electrical connection

1 Power supply
2 Signal connection (output)
3 Fill level signal

Table 40

Possible versions of the electrical connections

	Rectangular connector 3 + PE acc. to DIN EN 175301-803
	M12 connector acc. to DIN EN ISO 61076-2-101
	Bayonet connector, 4-pin, acc. to ISO 15170-1
	Bayonet connector, 7-pin, acc. to ISO 15170-1

NOTE

The design and arrangement of the electrical connections depend on the pump version ordered.

6.5 Setting the delivery rate on pump element R

Fig. 27

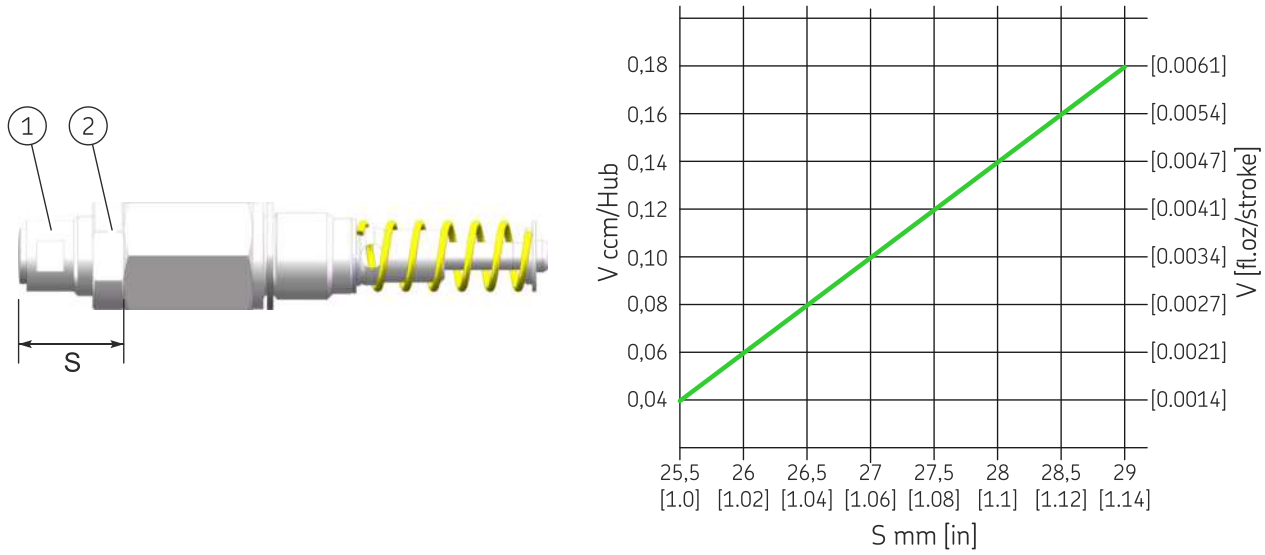

Setting the delivery rate on pump element R

1 Spindle
2 Locknut

S Spindle setting dimension
V Delivery volume per stroke

NOTE

Be sure to observe the formula for temperature-dependent calculation of the delivery rate using the example of a high-temperature grease, in the section 4.4.2.

NOTE

The delivery rate of pump element R can be adjusted only when the pump is at a standstill.
When delivered, the rate is set to full delivery, meaning the setting dimension is
S = 29 mm [1.14 in.].

Proceed as follows for setting:

1. Release the locknut (Fig. 27/2)
2. Set the delivery rate by turning the spindle (Fig. 27/1) to the dimension specified on the chart in Figure 27.
   ↺ = lower delivery rate
   ↻ = higher delivery rate
3. Once the delivery rate is set, tighten the locknut (Fig. 27/1) again.
   – Tightening torque: 20 Nm ±2.0 Nm [14.75 ft.lb. ±1.4 ft.lb.]

6.6 Installing the pressure limiting valve

Each pump element must be secured with a pressure limiting valve that is suitable for the projected maximum approved operating pressure of the centralized lubrication system.

NOTE
For the 2L XNFL reservoir versions and for all 4L and 8L reservoirs, the adapter 226-14105-5 (see "Spare parts" section) must be screwed in between the pump element and the pressure limiting valve and secured with a medium-strength threadlocker.

Proceed as follows for installation:

1. Remove the plug screw (Fig. 28/2) from the pump element (Fig. 28/1)
2. Screw the pressure limiting valve (Fig. 29/2) into the pump element (Fig. 29/1)
3. Repeat the procedure for each pump element

Fig. 28

Remove the plug screw

Fig. 29

Installing the pressure limiting valve

Tightening torques

- Pressure limiting valve in pump element:
  6 Nm - 0.5 Nm [4.43 ft.lb. ± 0.07 ft.lb.]

- Adapter in the pump element:
  8 Nm - 0.5 Nm [5.9 ft.lb. ± 0.07 ft.lb.].

6.7 Connection of the lubrication line

⚠ CAUTION

Risk of slipping
Exercise caution when handling lubricants. Immediately remove and bind any leaked lubricants.

NOTICE

Damage to the higher-level machine caused by faulty planning of the centralized lubrication system
All parts for the construction of the centralized lubrication system must be designed for the maximum operating pressure that occurs, the permissible ambient temperature range, the required delivery volume, and the lubricant to be supplied.

Observe the following assembly information for safe and trouble-free operation:

- Generally valid regulations and company regulations regarding the laying of pressurized pipe and hose lines must be observed.
- Use only clean, pre-filled components and lubrication piping.
- Secure every lubricant line on the pump against excessive pressure through the use of a suitable pressure limiting valve (only in the case of pumps without an internal pressure limiting valve).
- The main lubricant line should be routed on a rising gradient and should be able to be bled at the highest point. Lubrication lines should always be arranged so that air inclusions cannot form anywhere.
- Install lubricant metering devices at the end of the main lubricant line such that the outlets of the lubricant metering devices point upwards wherever possible.
- If the system configuration requires that the lubricant metering devices be arranged below the main lubricant line, they should not be placed at the end of the main lubricant line.
- The flow of lubricant should not be impeded by the presence of sharp bends, angle valves, flap valves, seals protruding inward, or changes in cross-section (large to small). Unavoidable changes in the cross-section in lubrication lines must have smooth transitions.
- Connect the lubricant lines in such a way that no mechanical forces are transferred to the product (stress-free connection).
- Lubrication piping is to be positioned in such a way that they cannot become kinked, pinched or frayed.

6.8 Filling with lubricant

NOTICE

Overfilling the reservoir
Property damage
Overfilling the reservoir can lead to damage. When filling the pump, make sure that the lubricant does not go over the MAX marking on the reservoir.

6.8.1 Filling via the reservoir cover

⚠ WARNING

Crushing hazard
Crushing hazard on the rotating stirring paddle. Filling through the opening of the reservoir lid is permitted only when the pump has been disconnected electrically beforehand by detaching the connection (Fig. 30/ 2) from the power supply.

Fig. 30

Filling via the reservoir cover

1. Disconnect the power supply to the pump by detaching the connector (Fig. 30/2).
2. Turn the reservoir lid (Fig. 30/1) counterclockwise and detach it from the reservoir. Set the reservoir cover down at a clean location. The inner side of the reservoir cover must not become contaminated. Remove any contaminations which may be present.
3. Fill the reservoir from the top up to the "MAX" marking (Fig. 30/3). Take care to ensure while doing so that the

lubricant is filled in without air inclusions if at all possible.
4. Reinstall the reservoir cover (Fig. 30/1) in clockwise direction.
5. Restore the power supply to the pump by attaching the connector (Fig. 30/2) and screwing it firmly in place.

6.8.2 Filling via filler nipple

Fig. 31

Filling via the filler nipple

1. Connect the fill connection of the filling pump to the filler nipple (Fig. 31/1).
2. Switch on the filling pump and fill the reservoir up to just below the - MAX - marking (Fig. 31/2).
3. Switch off the filling pump and remove it from the filler nipple (Fig. 31/1) of the pump.

NOTE
In the case of pumps with an ultrasonic sensor, fill the reservoir until both LEDs on the ultrasonic sensor light up green.
Then switch off the filling pump and remove it from the pump.

6.8.3 Filling via the optional fill connection

Fig. 32

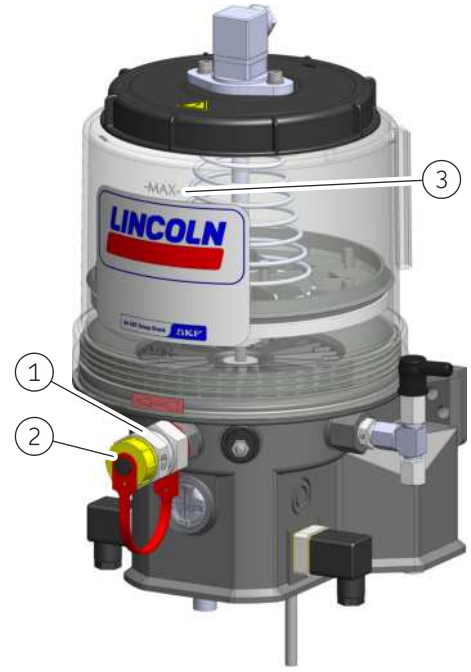

Filling via the optional fill connection

1. Switch on the pump and allow it to run during filling.
2. Unscrew the protective cap (Fig. 32/2) from the fill connection (Fig. 32/1).
3. Connect the fill connection of the filling pump to the fill connection (Fig. 32/1).
4. Switch on the filling pump and fill the reservoir up to just below the -MAX- marking (Fig. 32/3).
5. Switch off the filling pump and remove it from the fill connection (Fig. 32/1) of the pump.
6. Screw the protective cap (Fig. 32/2) onto the fill connection (Fig. 32/1).
7. Switch off the pump.

NOTE
In the case of pumps with an ultrasonic sensor, fill the reservoir until both LEDs on the ultrasonic sensor light up green.
Then switch off the filling pump and remove it from the pump.

6.8.4 Initial filling of an empty pump with follower plate

NOTE

For pumps without grease filling, the space underneath the follower plate must be filled with lubricant prior to first start-up. All additional filling is done exclusively via the filler nipple (Fig. 33/5) or the optional fill connection on the pump.

⚠ CAUTION

Risk of injury from spring tension

Release the reservoir cover slowly, holding it securely while doing so. Wear goggles.

Fig. 33

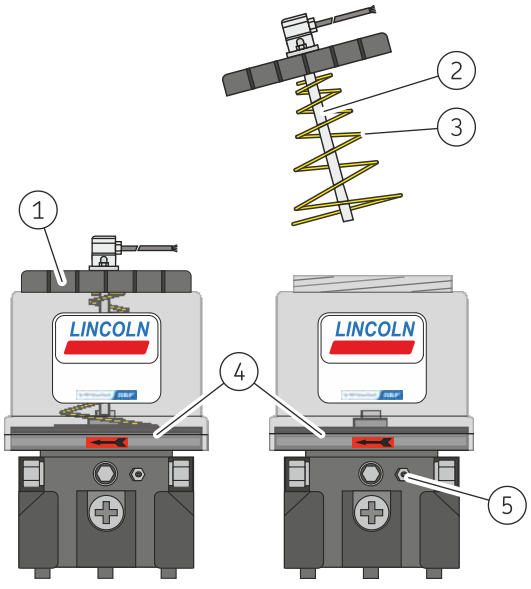

Initial filling of an empty pump with follower plate

1. Turn the reservoir cover (Fig. 33/1) counterclockwise and detach it from the reservoir.
2. Carefully release the spring (Fig. 33/3) from its fixation on the follower plate (Fig. 33/4).
3. Carefully pull the contact rod (Fig. 33/2) out of the follower plate (Fig. 33/4).
4. Remove the reservoir cover, contact rod, and spring together.
5. Lightly oil the inner side of the reservoir and the sealing lip of the follower plate.

Fig. 34

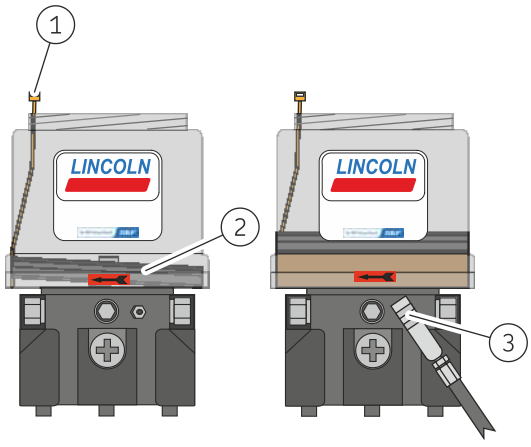

Inserting a cable tie and filling the pump

6. Tilt the follower plate (Fig. 34/2) in the reservoir slightly so that the side opposite the filler nipple (Fig. 33/5) is positioned at the highest point.
7. At this point, push the cable tie (Fig. 34/1) into the area underneath the follower plate as shown.
8. Move the follower plate (Fig. 34/2) back into horizontal position. Take care to ensure while doing so that an air gap is created by the cable tie (Fig. 34/1).
9. Set the fill connection(Fig. 34/3) of the filling pump on the filler nipple and fill the space underneath the follower plate with lubricant. Take care to ensure that no air inclusions remain under the follower plate and that no lubricant reaches the upper side of the follower plate.
10. Remove the cable tie (Fig. 34/1).

Fig. 35

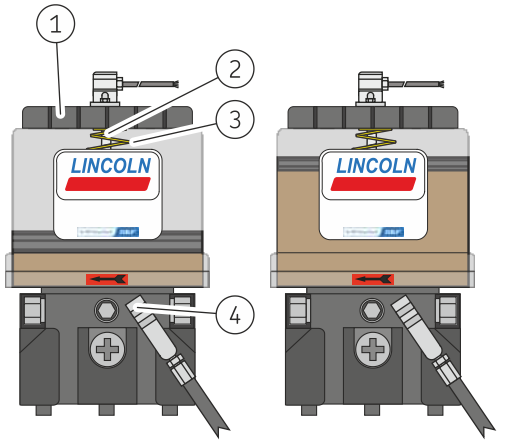

Installing the contact rod and cover

11. Reinstall the spring (Fig. 35/3) and the contact rod (Fig. 35/2) .
12. Close the reservoir cover (Fig. 35/1) in clockwise direction.
13. Fill the pump via the filler nipple (Fig. 35/4) up to the -MAX- marking.

6.8.5 Initial filling of an empty pump with double-lip follower plate

Fig. 36

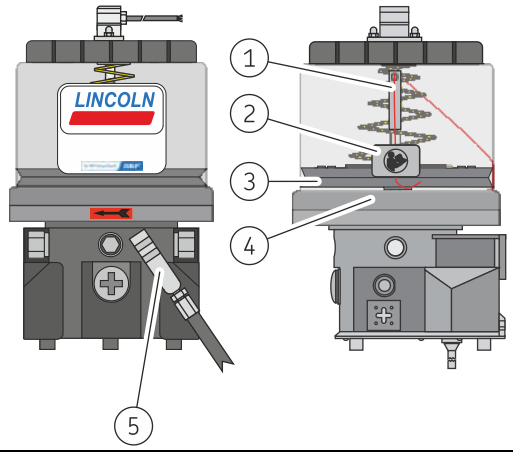

Initial filling of an empty pump with double-lip follower plate

NOTE

For initial filling of a pump delivered without lubricant, the pump is fitted with a bleed thread (Fig. 36/1) and a “Read instructions” sticker (Fig. 36/2). The bleed thread ensures that the air under the follower plate can escape when filling the pump for the first time. This prevents faults due to negative effects on the suction characteristics of the pump resulting from air inclusions under the follower plate. The bleed thread (Fig. 36/1) is **ONLY** required for the initial filling and must then be removed together with the “Read instructions” sticker (Fig. 36/2).

When filling for the first time, proceed as described below:

1. Align the pump so that it is upright.
2. Connect the filling pump to the filler nipple (Fig. 36/5).
3. Switch on the filling pump and carefully fill the space (Fig. 36/4) under the follower plate (Fig. 36/3) completely with lubricant, while observing the follower plate.
4. Switch off the filling pump once all the air under the follower plate has been displaced.
5. Detach the sticker (Fig. 36/2) and slowly and carefully pull the bleed thread (Fig. 36/1) down and out of the pump.
6. Switch on the filling pump and fill the reservoir with lubricant up to just below the - MAX - marking.
7. Properly dispose of the bleed thread and the sticker.

6.9 Adjust the pause time

Fig. 37

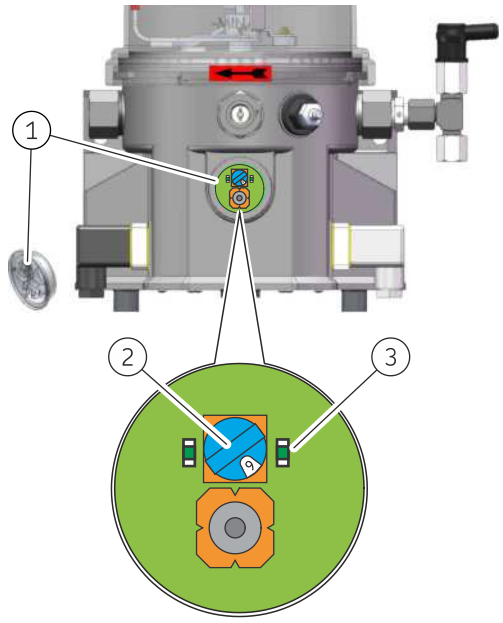

Control circuit board for P203

The pause time is set using the rotary switch on the control circuit board.

Proceed as follows for setting:

1. Remove the screw cap (Fig. 37/1) together with the packing ring.
2. Set the pause time by turning the blue rotary switch (Fig. 37/2).
   – For the time that corresponds to the switch position, see Table 42, Page 59 or Table 45, Page 61 .
3. Reinstall the screw cap together with the packing ring
   – Tightening torque 2 Nm ±0.2 Nm [1.48 ft.lb. ±0.15 ft.lb.].

NOTE

Never turn the rotary switch to the “0” position.
In the “0” position, the pump works with its factory settings and an error is displayed on the right-hand LED (Fig. 37/3) of the control circuit board.

6.9.1 Modifying the default pause times using jumpers

NOTICE

Damage to the main machine

The jumper settings on the control circuit board should not be modified if possible. Modified jumper settings are not immediately obvious to other people and could therefore lead to incorrect settings of the lubrication and pause times.

The setting range of the rotary switch is selected using jumpers on the control circuit board.

For information on the possible jumper settings, see section Settings for control circuit board M00-M23, Page 58 and Settings for control circuit board MS8-MS9, Page 60 .

6.10 Settings for control circuit board M00-M23

6.10.1 Factory settings of the jumpers for control circuit boards M00-M23

Fig. 38

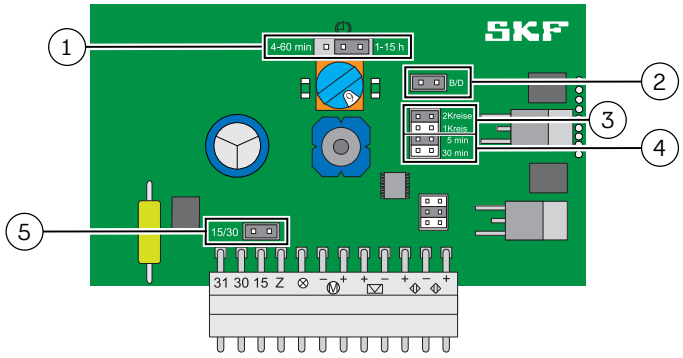

Jumper on control circuit board M00-M23

1 Pause time 1-15 hrs / 4-60 min
2 Signal output B (=intermittent) / D (=continuous)
3 Monitored lubrication circuits 1 / 2
4 monitoring time 5 min. / 30 min.
5 Supply voltage at terminal 30 / 15+30

Table 41

Factory settings of the jumpers for control circuit boards M00-M23

Control circuit board	Pause time Jumper Fig. 38/1 1-15 hrs.	Pause time Jumper Fig. 38/1 4-60 min.	Signal output Jumper Fig. 38/2 B	Signal output Jumper Fig. 38/2 D	Monitored lubrication circuits Jumper Fig. 38/3 1	Monitored lubrication circuits Jumper Fig. 38/3 2	Monitoring time Jumper Fig. 38/4 5 min.	Monitoring time Jumper Fig. 38/4 30 min.	Supply voltage at terminal Jumper Fig. 38/5 30	Supply voltage at terminal Jumper Fig. 38/5 15+30
M00	X	—	X	—	X	—	X	—	X	—
M01	X	—	X	—	X	—	—	X	X	—
M02	X	—	X	—	—	X	X	—	X	—
M03	X	—	X	—	—	X	—	X	X	—
M04	—	X	X	—	X	—	X	—	X	—
M05	—	X	X	—	X	—	—	X	X	—
M06	—	X	X	—	—	X	X	—	X	—
M07	—	X	X	—	—	X	—	X	X	—
M08	X	—	X	—	X	—	X	—	—	X
M09	X	—	X	—	X	—	—	X	—	X
M10	X	—	X	—	—	X	X	—	—	X
M11	X	—	X	—	—	X	—	X	—	X
M12	—	X	X	—	X	—	X	—	—	X
M13	—	X	X	—	X	—	—	X	—	X
M14	—	X	X	—	—	X	X	—	—	X
M15	—	X	X	—	—	X	—	X	—	X
M16	X	—	—	X	X	—	X	—	—	X
M17	X	—	—	X	X	—	—	X	—	X
M18	X	—	—	X	—	X	X	—	—	X
M19	X	—	—	X	—	X	—	X	—	X
M20	—	X	—	X	X	—	X	—	—	X
M21	—	X	—	X	X	—	—	X	—	X
M22	—	X	—	X	—	X	X	—	—	X
M23	—	X	—	X	—	X	—	X	—	X

= jumper set = X = jumper not set = —

6.10.2 Possible settings of the pause times for control circuit board M00- M23

Table 42

Settings of the pause times for control circuit board M00- M23

Position of the rotary switch (blue)	1	2	3	4	5	6	7	8	9	A	B	C	D	E	F
Pause time in minutes*	4	8	12	16	20	24	28	32	36	40	44	48	52	56	60
Pause time in hours*	1	2	3	4	5	6	7	8	9	10	11	12	13	14	15
Factory setting						X									

* The time value for the pause time is set at the factory using the blue rotary switch and the relevant jumper on the control circuit board. If possible, the operator should not change the position of the jumpers.

NOTICE

Impairment of pump function

Never turn the rotary switch to the “0” position. This position is intended solely for the purposes of the manufacturer. In the “0” position, the pump works with the settings of position 1.

NOTICE

Damage to the pump from exceeding the maximum duty cycle

Due to the pause time that is necessary with the permitted duty cycle of S3 25 ED 120 minutes, the positions of the blue rotary switch listed in Table 43 should only be used if you make sure that the pump finishes its operating time before the set monitoring time is reached.

Table 43

Circuit board	Pause time range	Monitoring time	Rotary switch position
M01, M03, M09, M11, M17, M19	Hours	30 minutes	1
M04, M06, M12, M14, M20, M22	Minutes	5 minutes	1, 2, 3
M05, M07, M13, M15, M21, M23	Minutes	30 minutes	All

6.11 Settings for control circuit board MS8-MS9

6.11.1 Factory settings of the jumpers for control circuit board MS8-MS9

Fig. 39

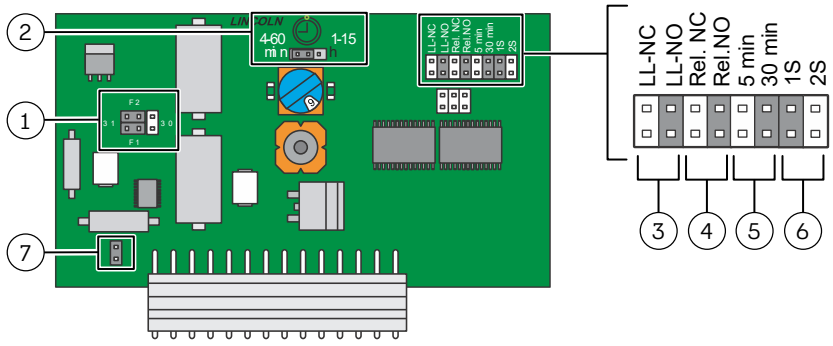

Jumper on control circuit board MS8-MS9

Table 44

Factory settings of the jumpers for control circuit boards MS8-MS9

	Error relays F1 and F2 Jumper Fig. 39/1		Pause time Jumper Fig. 39/2		Empty signal Jumper Fig. 39/3		Error relays F1 and F2 Jumper Fig. 39/4	
	31	30	4-60 min.	1-15 hrs.	NC contact (LL-NC)	NO contact (LL-NO)	NC contact (Rel.-NC)	NO contact (Rel. NO)
Control circuit board								
MS8	X	—	X	—	—	X	—	X
MS9	—	X	—	X	—	X	X	—

Factory setting = jumper set = X = jumper not set = —

	Monitoring time Jumper Fig. 39/5		Monitored lubrication circuits Jumper Fig. 39/6		Supply voltage at terminal Jumper Fig. 39/7	
	5 min	30 min.	1	2	30/15	30/15
Control circuit board						
MS8	—	X	X	—	X	
MS9	X	—	X	—	—	

NOTE

Error relays settings:

- 31 = error relays F1 and F2 connected to -0 V DC
- 30 = error relays F1 and F2 connected to 24 V DC.

6.11.2 Possible settings of the pause times for control circuit board MS8- MS9

Table 45

Settings of the pause times for control circuit board MS8- MS9

Position of the rotary switch (blue)	1	2	3	4	5	6	7	8	9	A	B	C	D	E	F
Pause time in minutes*	4	8	12	16	20	24	28	32	36	40	44	48	52	56	60
Pause time in hours*	1	2	3	4	5	6	7	8	9	10	11	12	13	14	15
Factory settings[1)]						X									

* The time value for the pause time is set using the blue rotary switch and the relevant jumper on the control circuit board. If possible, the operator should not change the position of the jumpers.

[1)] The factory setting of the rotary switch (below) is set by default to position 6 or to a customized setting.

NOTICE

Impairment of pump function

Never turn the rotary switch to the “0” position. This position is intended solely for the purposes of the manufacturer. In the “0” position, the pump works with the settings of position 1.

NOTICE

Damage to the pump from exceeding the maximum duty cycle

Due to the pause time that is necessary with the permitted duty cycle of S3 25 ED 120 minutes, the positions of the blue rotary switch listed in Table 46 should only be used if you make sure that the pump finishes its operating time before the set monitoring time is reached.

Table 46

Circuit board	Pause time range	Monitoring time	Rotary switch position
MS8	Minutes	30 minutes	1
MS9	Hours	5 minutes	1, 2, 3

7 First start-up

In order to warrant safety and function, a person assigned by the operator must carry out the following inspections. Immediately eliminate detected deficiencies. Deficiencies may be remedied by an authorized and qualified specialist only.

7.1 Inspections before first start-up

Table 47

Checklist: Inspections before first start-up

Inspections to be performed	YES	NO
Electrical connection established correctly.	☐	☐
Mechanical connection established correctly.	☐	☐
The parameters set on the control are appropriate for the pump's intended application.	☐	☐
The performance characteristics for the aforementioned connections match the specifications in the “Technical data”.	☐	☐
All components, e.g. lubrication lines, are pre-filled with the correct lubricating grease and correctly installed.	☐	☐
No apparent damage, contamination, or corrosion.	☐	☐
Product is protected by a suitable pressure relief valve.	☐	☐
Any dismantled protective and monitoring equipment is fully reinstalled and functional.	☐	☐
All warning labels on the product are present and in proper condition.	☐	☐
The lubricant used matches the permissible specifications of the pump and the intended use.	☐	☐

7.2 Inspections during first start-up

Table 48

Checklist: Inspections during first start-up

Inspections to be performed	YES	NO
No unusual noises, vibrations, moisture accumulation, or odors present.	☐	☐
No undesired discharge of lubricant at connections (leakage).	☐	☐
Lubricant is fed without bubbles.	☐	☐
The bearings and friction points requiring lubrication receive the planned lubricant volume.	☐	☐

8 Operation

SKF products operate automatically to the greatest possible extent.
Basically, activities during standard operation are limited to:

- Regular function checks
- Checking the fill level on pumps without low-level signal
- Timely refilling of lubricant
- Cleaning the exterior if dirty

8.1 Top up lubricant

See section Filling with lubricant, Page 53 .

8.2 Triggering additional lubrication

Fig. 40

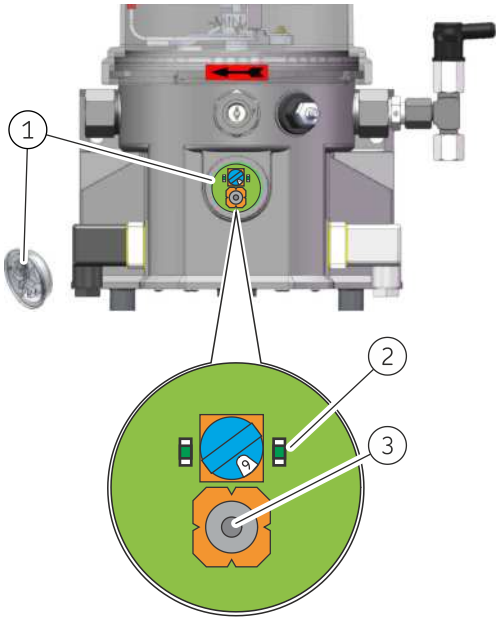

Triggering additional lubrication

1 Screw cap
2 LED for Operation / Fault (steady light = pump is running)
3 Pushbutton

To trigger additional lubrication, proceed as follows:

1. Remove the screw cap (Fig. 40/1) together with the packing ring.
2. To trigger additional lubrication, press the pushbutton (Fig. 40/3) on the control circuit board (for more than 2 seconds). The right-hand LED (Fig. 40/2) lights up for as long as the motor runs.
  – The pump starts a lubrication cycle. The duration of the lubrication cycle is determined by the value set on the control circuit board.
3. Reinstall the screw cap and the packing ring.
  – Tightening torque: 2 Nm ±0.2 Nm [1.48 ft.lb. ±0.15 ft.lb.]

8.3 Resetting an error message

Fig. 41

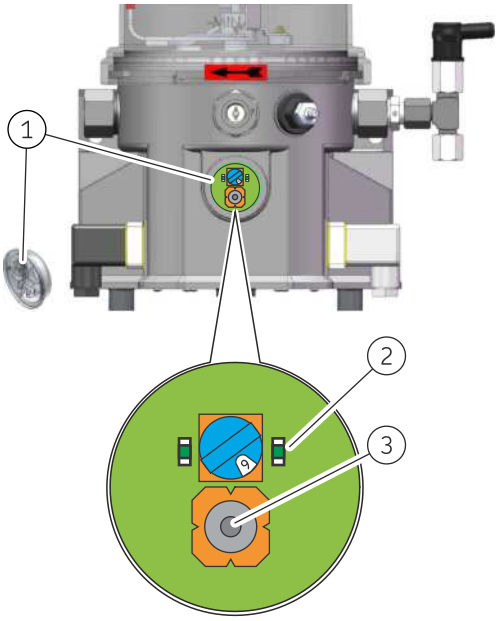

Resetting an error message

1 Screw cap
2 LED for “Operation / fault” (flashing = fault)
3 Pushbutton

To reset an error message, proceed as follows:

1. Based on the flashing frequency of the LED (Fig. 41/2), localize and remedy the fault: see section 11.1.
2. Remove the screw cap (Fig. 41/1) together with the packing ring.
3. To reset the error message, press the pushbutton (Fig. 41/3) on the control circuit board (for less than 1 second). The right-hand LED goes off.
4. To switch on the pump, press the pushbutton again (for more than 2 seconds). An additional lubrication is carried out.
5. Reinstall the screw cap and the packing ring.
  – Tightening torque: 2 Nm ±0.2 Nm [1.48 ft.lb. ±0.15 ft.lb.]

NOTE
If a fault is not reset, it remains saved even when the machine contact/driver switch is switched off, meaning that when the pump is switched back on, the right-hand LED will flash to indicate the active fault.

9 Maintenance

Careful and regular maintenance is required in order to detect and remedy possible faults in time. The operator must always determine the specific intervals according to the operating conditions, review them regularly, and adjust them where necessary. If necessary, copy the table for regular maintenance activities.

Table 49

Checklist: Maintenance activities

Activity to be performed	YES	NO
Mechanical and electrical system connections established correctly	☐	☐
The performance characteristics for the aforementioned connections match the specifications in the “Technical data”	☐	☐
All components such as lubrication lines and metering devices are correctly installed	☐	☐
Product is protected by a suitable pressure relief valve	☐	☐
No apparent damage, contamination, or corrosion	☐	☐
Any dismantled protective and monitoring equipment is fully reinstalled and functional	☐	☐
All warning labels on the product are present and in proper condition	☐	☐
No unusual noises, vibrations, moisture accumulation, or odors present	☐	☐
No undesired discharge of lubricant (leakages) at connections	☐	☐
Lubricant is fed without bubbles	☐	☐
The bearings and friction points requiring lubrication receive the planned lubricant volume	☐	☐

10 Cleaning

⚠ WARNING

Risk of fatal electric shock

Cleaning work may only be performed on products that have been de-energized first. When cleaning electrical components, be mindful of the IP enclosure rating.

⚠ WARNING

Serious injury from contact with or inhalation of hazardous substances

Wear personal protective equipment. Observe the safety data sheet (SDS) of the hazardous substance. Avoid contaminating other objects or the environment during cleaning.

10.1 Basics

Cleaning should be carried out in accordance with the operator's own company rules, and cleaning agents and devices and the personal protective equipment to be used should likewise be selected in accordance with those rules. Only cleaning agents compatible with the materials may be used for cleaning. Completely remove any cleaning agent residue left on the product and rinse with clear water. Unauthorized persons must be kept away. Use signage to indicate wet areas.

10.2 Interior cleaning

The interior normally does not need to be cleaned. The interior of the product must be cleaned if incorrect or contaminated lubricant accidentally enters the product. Please contact our Service department.

10.3 Exterior cleaning

Do not allow any cleaning fluid to enter the interior of the product during cleaning.

10.3.1 Cleaning pumps with Xx_G and XBxG reservoir designs

NOTICE

Do not clean the reservoir with alcohols or similar substances containing alcohols

When cleaning pumps with Xx_G and XBxG reservoir designs, never use alcohols for cleaning, or similar substances containing alcohols. That can cause damage to the reservoir and to the adhesive seal.

To clean the reservoir, use only cleaning agents permitted for use on acrylic glass or Plexiglas.
If products have ultrasonic sensors, the active sensor surface must be cleaned with a cloth when it becomes contaminated.

11 Faults, causes, and remedies

Table 50

Fault table

Fault	Possible cause	Remedy
Pump does not run	• Power supply to pump interrupted. – Main machine is switched off – Pump power cable detached or defective – External fuse defective – The pump is in pause time – The motor of the pump is faulty – Internal cable break • Control circuit board or power supply board is defective	• Check whether one of the specified faults exists, and remedy it according to responsibility • Faults outside one's own scope of responsibility must be reported to the supervisor for initiation of further measures • Please contact our Customer Service if you cannot determine or resolve the error
Pump runs, but supplies either no lubricant at all or not enough	• Jam, malfunction within the centralized lubrication system • Check valve defective • Pressure limiting valve defective • Suction bore in a pump element is clogged • Worn pump element • Air inclusion in the lubricant / under the follower plate • Consistency of the lubricant is too high (at low temperatures) • Consistency of the lubricant is too low (at high temperatures) • Metering device within the centralized lubrication system is configured incorrectly	• Check whether one of the specified faults exists, and remedy it according to responsibility • Faults outside one's own scope of responsibility must be reported to the supervisor for initiation of further measures • Please contact our Customer Service if you cannot determine or resolve the error

Table 51

Fault table

Fault	Possible cause	Remedy
Error message after power failure during operating time.	• Jumper setting: Monitoring time 5 min. and Monitored lubrication circuits 1. If the power is interrupted, an error message is displayed after 5 minutes but the pump only switches off after 30 minutes.	• acknowledge the error message. Additional lubrication will then be triggered.

11.1 Indication of operational and fault states by the LEDs on the control circuit board

Fig. 42

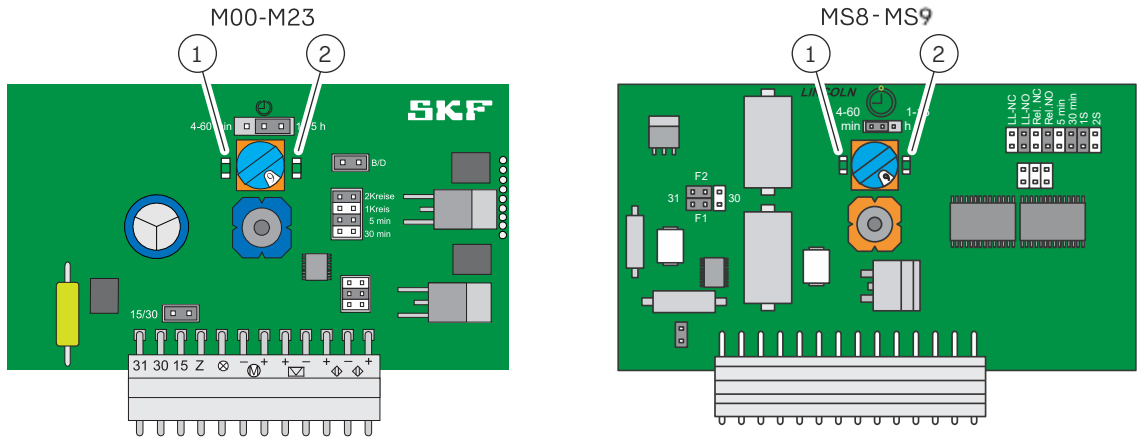

LEDs on the control circuit board

1 Left LED

2 Right LED

11.1.1 Operating statuses with control circuit boards M00-M23 and MS8-MS9

Certain operating statuses are indicated by the LEDs on the control circuit board.

Table 52

Operating statuses with control circuit boards M00-M23 and MS8-MS9

Display LED on the left	Display LED on the right	No.	Meaning
		B1	No operating voltage or insufficient operating voltage, or the control circuit board is defective. Both LEDs are off.
		B2	Operating voltage is applied, the left-hand LED shows a steady light, the right-hand LED is OFF. This is the normal operating status during the pause time.
		B3	The pump motor is running. Both LEDs show a steady light. This is the normal operating status during the operating time or when an additional lubrication has been triggered.

11.1.2 Faults with control circuit boards M00-M23

In the event of faults (such as low-level signal, faults on the motor, or malfunctions in the monitored lubrication circuits), the control circuit board switches the pump off.

NOTE
After a fault is remedied, the pump does not start automatically. It must be reactivated by triggering an additional lubrication.

If the pump motor does not run after switching on, after 2 seconds the right-hand LED on the control circuit board flashes as shown below, according to the fault that occurred:

Table 53

Fault indication with control circuit boards M00-M23

Display of right-hand LED	No.	Meaning
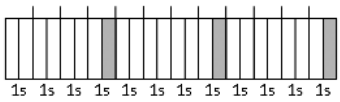	E1	Pump motor is defective
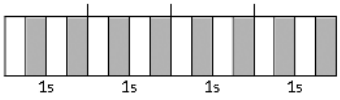	E2	Low-level signal
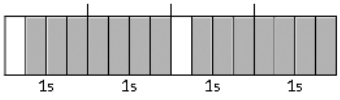	E3	Fault in lubrication circuit 1
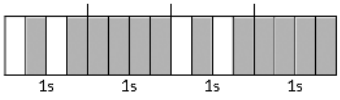	E4	Fault in lubrication circuit 2
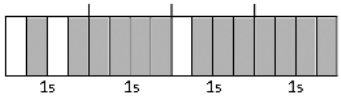	E5	Fault in lubrication circuits 1 + 2

11.1.3 Faults with control circuit board MS8- MS9

In the event of faults (such as low-level signal, faults on the motor, or malfunctions in the monitored lubrication circuits), the control circuit board switches the pump off.

> **NOTE**
> After a fault is remedied, the pump does not start automatically. It must be reactivated by triggering an additional lubrication.

If the pump motor does not run after switching on, after 2 seconds the right-hand LED on the control circuit board flashes as shown below, according to the fault that occurred:

Table 54

Fault indication with control circuit boards MS8-MS9

Display of right-hand LED	No.	Meaning
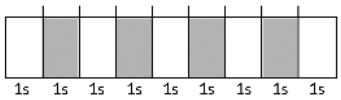	E1	Pump motor is defective (relay 1 is activated)
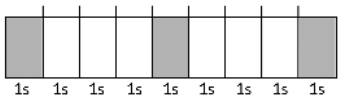	E2	Low-level signal (relay 1 is activated)
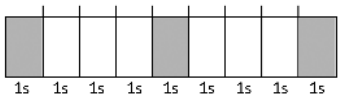	E3	Fault notification for low-level signal and piston detector fault (relay 1 and relay 2 are activated). PLC analysis can be used to distinguish between faults E2 and E3.
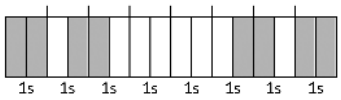	E4	Piston detector fault in lubrication circuit 1. Relay 2 is active
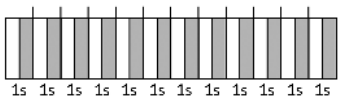	E5	Short circuit on the additional lubrication button (0.5 s flashing, 0.5 s off)

12 Repairs

⚠ WARNING

Risk of injury
At a minimum, the following safety measures must be taken before any repairs:

- Unauthorized persons must be kept away
- Mark and secure the work area
- Depressurize the product
- Isolate the product, and lock and tag it out
- Check to ensure live voltage is no longer present
- Ground and short-circuit the product
- Cover any adjacent live parts.

12.1 Replacing pump element and pressure limiting valve

Fig. 43

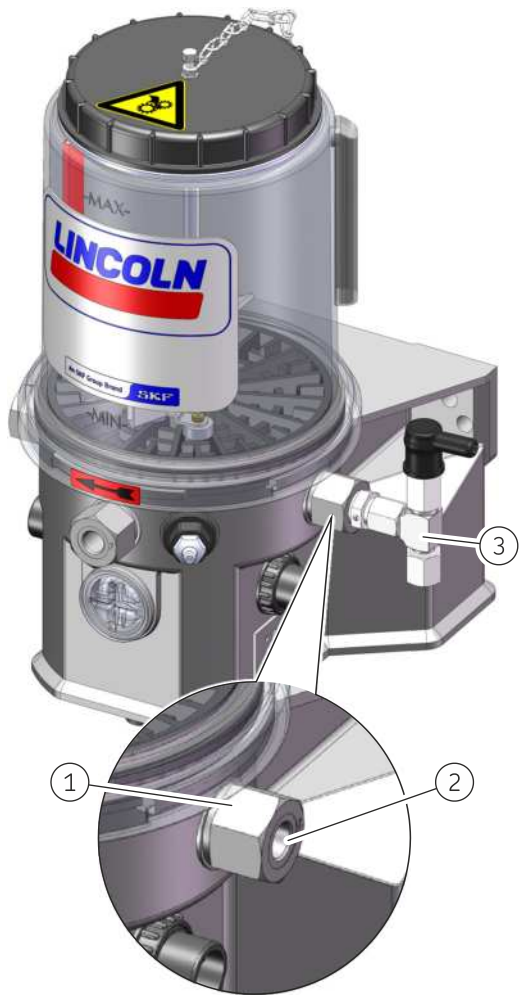

Replacing pump element and pressure limiting valve

NOTE
The characteristics of the new pump element must match the characteristics of the pump element to be replaced.

Replace the pump element as instructed below:

1. Remove the defective pump element (Fig. 43/1) from the pump housing together with the pressure limiting valve (Fig. 43/3), by unscrewing on the hexagon of the pump element.
2. Screw the new pump element (Fig. 43/1) together with a new packing ring into the pump housing. Remove plug if necessary (Fig. 43/2).
   - The torque for tightening the pump element is 20 Nm ± 2.0 Nm [14.75 ft.lb. ± 1.4 ft.lb.]
3. Afterwards, screw a new pressure limiting valve (Fig. 43/3) into the pump element.
   - The torque for tightening the pressure limiting valve is 6 Nm -0.5 Nm [4.43 ft.lb. -0.07 ft.lb.]

12.2 Replacing the control circuit board

Fig. 44

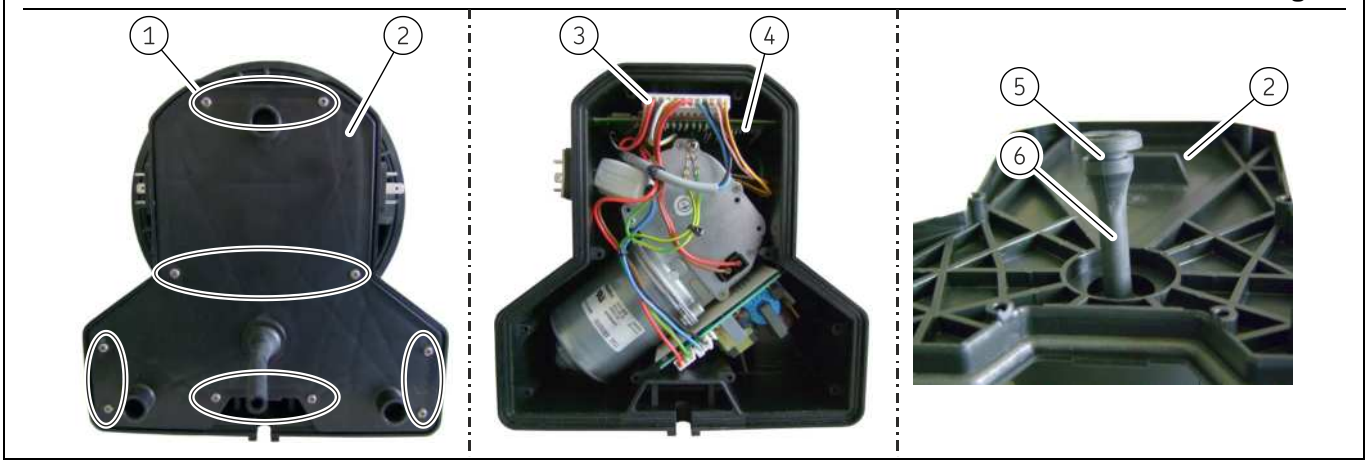

Replacing the control circuit board

1 Screws (10×) for lower housing cover
2 Housing cover
3 Plug on the control circuit board
4 Control circuit board
5 Groove on the dewatering hose
6 Dewatering hose

NOTE
The work should be done at room temperature if possible. Very low temperatures could make replacement difficult. To make it easier to replace the control circuit board, tilt the pump into a horizontal position.

Proceed as follows to replace the control circuit board:

1. Check that the new control circuit board matches the documentation and the intended use.
2. Take protective measures against electrostatic discharge.
3. Remove the screws (Fig. 44/1) from the housing cover (Fig. 44/2).
4. Removing the housing cover
5. Pull the plugs (Fig. 44/3) out of the control circuit board and pull the control circuit board (Fig. 44/4) out of the two side guide rails.
6. Make a note of any altered jumper positions and rotary switch settings and transfer them to the new control circuit board.
7. Place the control circuit board in the side guide rails and carefully push it down.
8. Re-insert the plugs.
9. Guide the dewatering hose (Fig. 44/6) through the housing cover (Fig. 44/2) from the rear until its groove (Fig. 44/5) engages securely in the housing cover
10. Place the housing cover on the pump housing and install it again with the screws
    - Tightening torque 0.6 Nm ±0.1 Nm [0.44 ft.lb. ±0.01 ft.lb.]
11. Install the pump at the place of use again.
    - Installation and start-up at the place of use should be done as described in the Assembly chapter.

Checks after replacing the control circuit board

NOTE
An electrical inspection in accordance with EN 60204-1 must be performed after the replacement of the control circuit board.

Archiving
The scope and results of the inspection after replacement of the control circuit board must be recorded in writing and given to the party responsible for operation of the machine, for archiving.

12.2.1 Test run of the pump

After replacing the control circuit board, you must carry out a test run of the centralized lubrication system.

- To do so, trigger a lubrication pulse by pressing the “Additional lubrication” button.
- The sensor of the metering device must then report a successful lubrication process.

13 Shutdown, disposal

13.1 Temporary shutdown

Temporary shutdowns should be done by a course of action to be defined by the operator.

13.2 Permanent shutdown, disassembly

Permanent shutdown and disassembly of the product must be planned properly by the operator and conducted in compliance with all applicable laws and regulations.

13.3 Disposal

The waste producer/operator must dispose of the various types of waste in accordance with the applicable laws and regulations of the country in question.

14 Spare parts

Spare parts may be used exclusively for replacement of identical defective parts. Modifications with spare parts on existing products are not allowed.

14.1 Housing cover, complete

Designation	Pcs.	Item number	Figure
Housing cover, complete	1	544-32217-1	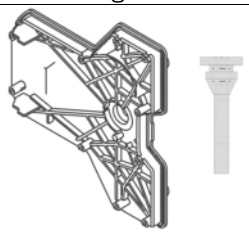
Housing cover, complete, for UL-certified pumps	1	544-60207-1	
Delivery including dewatering hose and the appropriate number of screws for installation			

14.2 Pump elements

Designation	Pcs.	Item number C3 design	Item number C5-M design	Figure
Pump element L incl. packing ring	1	600-78018-1	Not available	
Pump element 5 incl. packing ring	1	600-26875-2	600-29303-1	
Pump element 6 incl. packing ring	1	600-26876-2	600-29304-1	
Pump element 7 incl. packing ring	1	600-26877-2	600-29305-1	
Pump element R incl. packing ring	1	655-28716-1	Not available	
Pump element B incl. packing ring	1	600-29185-1	Not available	
Pump element C incl. packing ring	1	600-28750-1	Not available	

14.3 Pressure limiting valves and adapters

Designation	Pcs.	Item number	Figure
SVTS-350-R1/4-D6 | C3	1	624-28894-1	
SVTS-350-R1/4-D6 | C5 M	1	624-29343-1	
SVET-350-G1/4 A-D8 | C3	1	624-29054-1	
SVTS-270-R1/4-1/8 NPTFI-NIP00R-A | C3	1	270864	
Adapter S2520 1/4-1/4 PTFE packing ring	1	226-14105-5	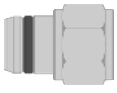

Other pressure limiting valves in C3 and C5-M on request.

14.4 Adapter D6 AX 1/8NPT I C

Designation	Pcs.	Item number	Figure
Adapter for pressure limiting valve 270864 | C3	1	304-19614-1	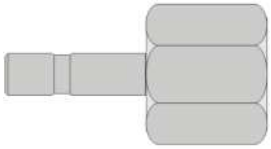

14.5 Adapter with lubricant nipple

Designation	Pcs.	Item number	Figure
Adapter with lubricant nipple ST 1/4 NPTF incl. seal	1	519-33840-1	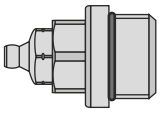
Adapter with lubricant nipple A2 AR 1/4 incl. seal	1	519-33959-1	
Adapter with lubricant nipple ST AR 1/4 incl. seal	1	519-33955-1	

14.6 Plug screw M22x1.5

Designation	Pcs.	Item number	Figure
Plug screw M22x 1.5 incl. seal	1	519-60445-1	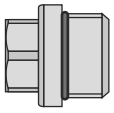
Used to close an unused outlet, e.g., when a pump element is removed.			

14.7 Motor 12 / 24 VDC

Designation	Pcs.	Item number	Figure
Motor 12 VDC	1	544-36913-6	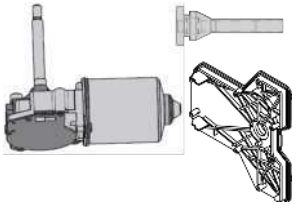
Motor 24 VDC	1	544-36913-7	

Delivery includes 1 x motor connection for control circuit board; 2 x O-ring 142 x 4;
3 x O-ring 6 x 2;
1 x radial shaft seal; 3 x self-tapping screw M6 x 25; 3 x washer; 1 x woodruff key;
1 x housing cover with dewatering hose and the matching number of screws for installation

14.8 Replacement kit for control circuit board

Designation	Pcs.	Item number	Figure
Replacement kit for control circuit board M00-M23	1	544-60222-1	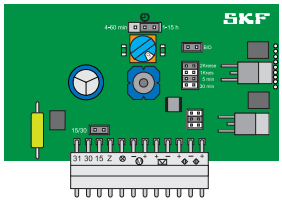
Replacement kit for control circuit board MS8-MS9 24 VDC	1	544-60341-1	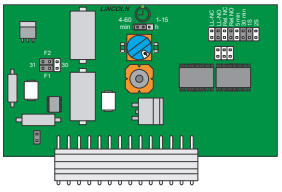

Delivery including housing cover, dewatering hose, and the appropriate number of screws for installation

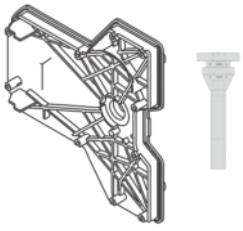

NOTE

Replacement kit for control circuit board M00-M23 / MS8-MS9

When delivered from the factory, the jumper settings of the control circuit board correspond to the configuration of control circuit board M10 / MS8. When replacing, you may need to adapt the jumper settings to the intended application (the jumper settings of the control circuit board being replaced). For jumper settings, see section Factory settings of the jumpers for control circuit boards M00-M23, Page 58 / Factory settings of the jumpers for control circuit board MS8-MS9, Page 60 .

14.9 Reed switch

Designation	Pcs.	Item number	Figure
Reed switch with NO contact, for intermittent low-level signal	1	544-60277-1	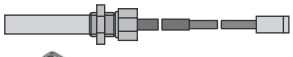

Delivery including housing cover, dewatering hose, and the appropriate number of screws for installation

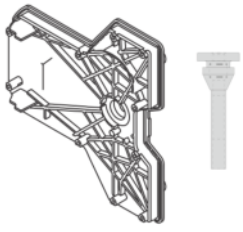

14.10 Transparent reservoir

Designation	Pcs.	Item number	Figure
2l XNFL [B,C]	1	544-31997-1	
2l XN [A,B,C]	1	544-31996-1	
2l XL (with fixed paddle) [A,B,C]	1	544-32028-1	
2l XN / YNBO [A,B,C,D,E]	1	544-31940-1	
2l XLBO (without stirring paddle) [A,B,C,D,E]	1	544-32027-1	(looks like figure 544-31940-1)
4l XNBO / YNBO / XLBO / YLBO / XBF [A,B,C]	1	544-31998-1	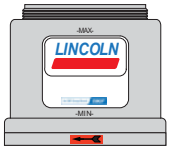
4l XN / XL [A,B,C,F]	1	544-32695-1	
8l XNBO / YNBO / XLBO / YLBO / XBF [A,B,C]	1	544-31999-1	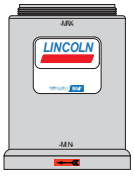
8l XN / XL [A,B,C,F]	1	544-32696-1	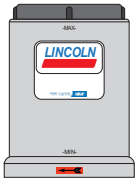

Delivery includes: A = Lincoln/SKF logo, B = rotation arrow, C = O-ring, D = reservoir cover, E = pinch point warning sticker, F = reservoir cover non-detachable (screwed onto the reservoir)

NOTE

Other transparent reservoirs on request.

14.11 Fixed paddle

Designation	Pcs.	Item number	Figure
Fixed paddle 4 XNBO	1	444-70490-1	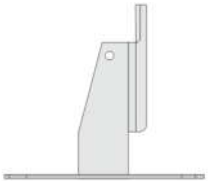
Fixed paddle 8 XNBO	1	444-70491-1	

14.12 Reservoir cover

Designation	Pcs.	Item number	Figure
A) Reservoir cover 4/8 l [1.06/2.11 gal.] XNBA/XLBA Lockable, incl. 2 keys and warning sticker	1	544-36963-1	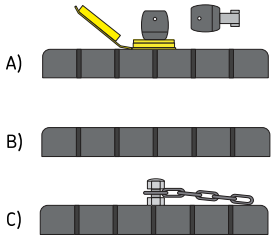
B) Reservoir cover 4/8 l [1.06/2.11 gal.] Incl. warning sticker	1	544-31992-1	
C) Reservoir cover 2 l [0.53 gal.] XNBO Incl. chain	1	544-85156-1	

14.13 Screw cap

Designation	Pcs.	Item number	Figure
Screw cap on the pump housing	1	544-32851-1	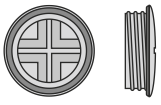

14.14 Connection sockets and cables

Code*	Designation	Pcs.	Item number	Figure
F	Connection cable 10 m (33 ft.) with bayonet socket (7/5-pin)	1	664-34167-2	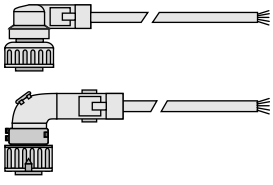
G	Connection cable 10 m (33 ft.) with bayonet socket (7/7-pin)	1	664-34428-3	
K	Connection cable 10 m (33 ft.) with bayonet socket (4/4-pin)	1	664-34167-9	

Code*	Enclosure rating (IEC 60529)
F	IP 6K9K
G	IP 6K9K
K	IP 6K9K

* = feature in the type identification code (category K, connection hardware)

15 Appendix

15.1 Connection diagrams

NOTE

- You can find the right terminal diagrams for each specific pump version by referring to the type identification code features applied on the terminal diagrams.

Table 55

Cable colors in accordance with IEC 60757

Abbreviation	Color	Abbreviation	Color	Abbreviation	Color	Abbreviation	Color
BK	Black	GN	Green	WH	White	PK	Pink
BN	Brown	YE	Yellow	OG	Orange	TQ	Turquoise
BU	Blue	RD	Red	VT	Violet	GY	Gray
GNYE	Green/Yellow	RDWH	Red/White	GD	Gold	SR	Silver

Not all cable colors need to be used in the terminal diagrams.

15.1.1 Connection diagram of the signal line on the reservoir cover

NOTE

The signal line can be connected using a PG9 screwed gland on the pump housing.

Fig. 45

Rectangular connector

Lubrication grease, XBxx reservoir Reed switches for full and low-level signal	Lubrication oil, YLxx reservoir Float switch for low-level signal	Lubrication grease (special design) Reed switch for low-level signal
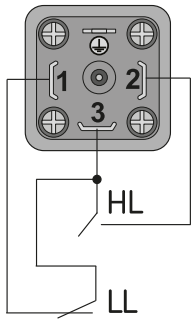	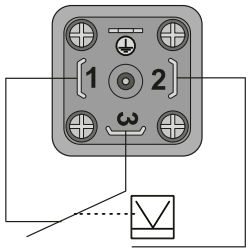	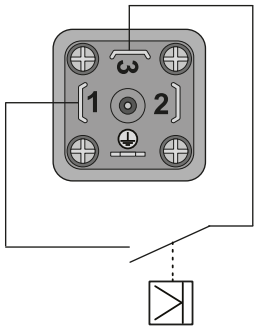

Electrical data

Max. switching capacity	60 VA	60 VA	60 VA
Max. switching voltage	30 VDC	230 V	30 VDC
Max. switched current	700 mA	1 A	700 mA

Diagram shows unactuated state, HL = full signal, LL = low-level signal

M12 connector

Lubrication grease (XPF reservoir) Actuating rod for full—low-level—pre-empty signal	Lubrication grease (BIxx reservoir) Ultrasonic sensor for full and low-level signal with inverted signals
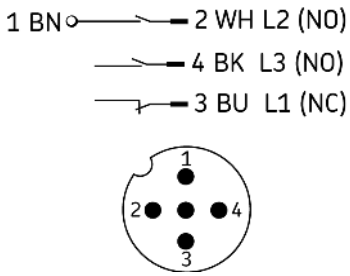	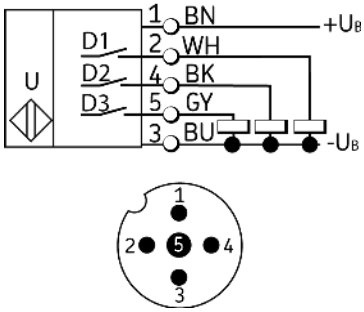

Electrical data

Max. switching capacity	60 VA
Max. switching voltage	10-30 VDC/VAC
Max. switched current	700 mA

Electrical data: see section Technical data, Ultrasonic sensor

Connection diagram of the signal line on the reservoir cover

15.1.2 Recommended contact protection for switching inductive loads

Fig. 46

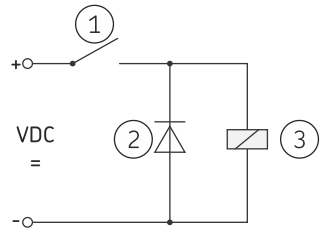

Contact protection

1 Contact of the low-level signal
2 Interference suppression diode (free-wheeling diode)
3 Load

When switching inductive loads with direct voltage, the operator should provide the contact protection measure shown in Figure 46 to protect the contacts of the low-level signal.

15.1.3 Overview of cables and possible connections

Table 56

Cables and possible connections

Pump						Cable			
External Plug	Color	Pin	Color	Internal Function	Polarity	Item number	Length	Cross-section	Enclosure rating
Bayonet, 7-pin	RD BN BK WH YE BU GN	1 2 3 4 5 6 7	RD BN BK WH YE BU GN	+12/24VDC GND Ignition Add Lub (Z) Messages (see terminal diagram)	+12/24V GND Positive Negative	664-34428-3	10 m	7×1.5 mm²	IP 6K9K
Bayonet, 7/5-pin	RD BN BK WH YE	1 2 3 4 5	RD BN BK WH YE	+12/24VDC GND Ignition Add Lub (Z) Messages (see terminal diagram)	+12/24V GND Positive Negative	664-34167-2	10 m	3x1.5 mm² (RD, BN,BK) 2x0.5 mm² (WH, YE)	IP 6K9K
Bayonet, 4/4-pin	RD/YE BN/YE WH/RD WH/BN	1 2 3 4	RD/YE BN/YE WH/RD WH/BN	Sensor 1 Sensor 1 Sensor 2 Sensor 2	+ GND + GND	664-34167-9	10 m	4×0.5 mm²	IP 6K9K

15.1.4 Terminal diagram for P203 VDC with control circuit board M00-M23

Fig. 47

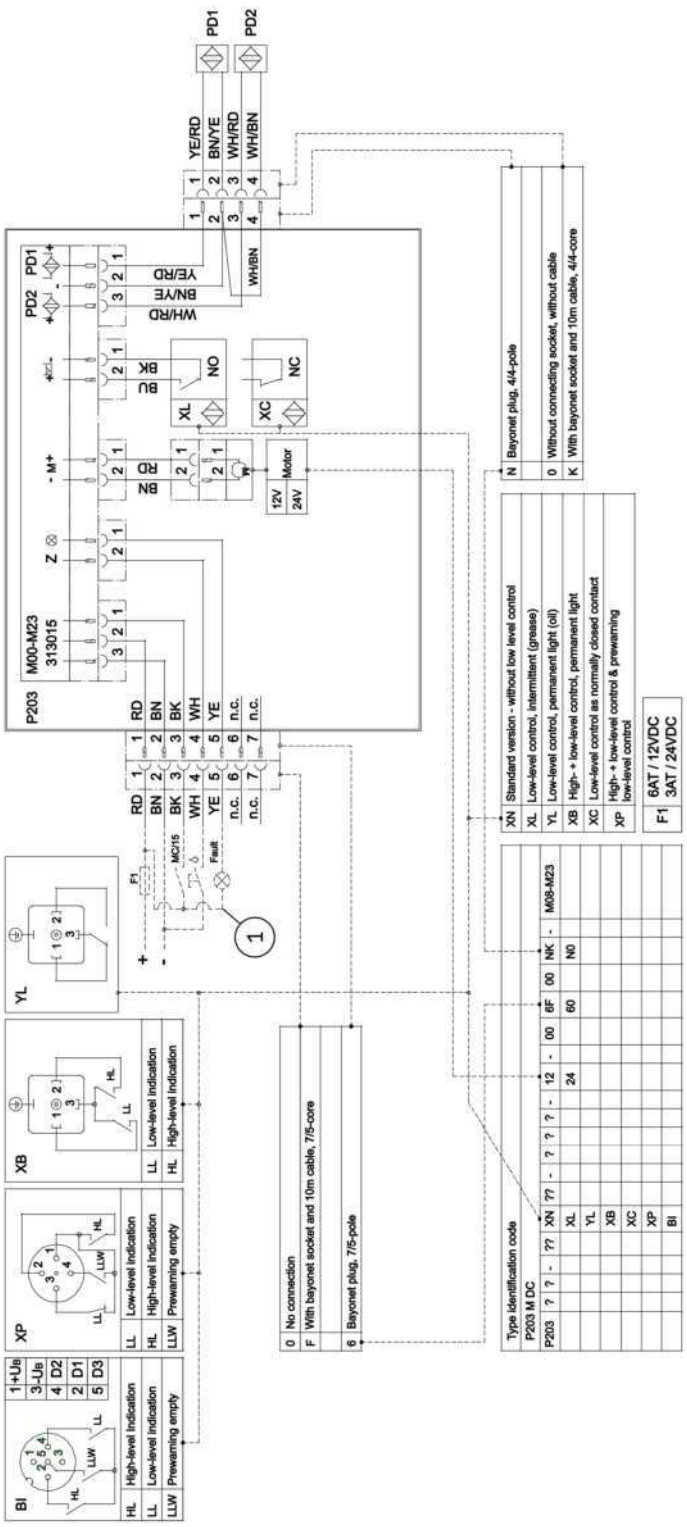

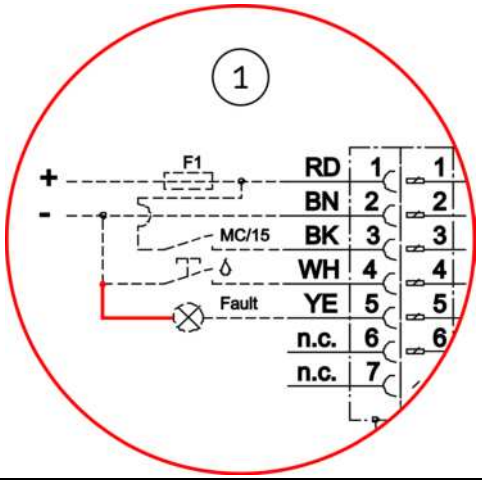

NOTE

If the FAULT output is connected to negative (pulse output undefined due to the connected load impedance), then the pulse output is inverted in contrast to the fault states as shown in section Indication of operational and fault states by the LEDs on the control circuit board, Page 67 . The indicator LED on the right is on.

Terminal diagram with control circuit board M00-M23

15.1.5 Terminal diagram for P203 VDC with control circuit board MS8-MS9

Fig. 48

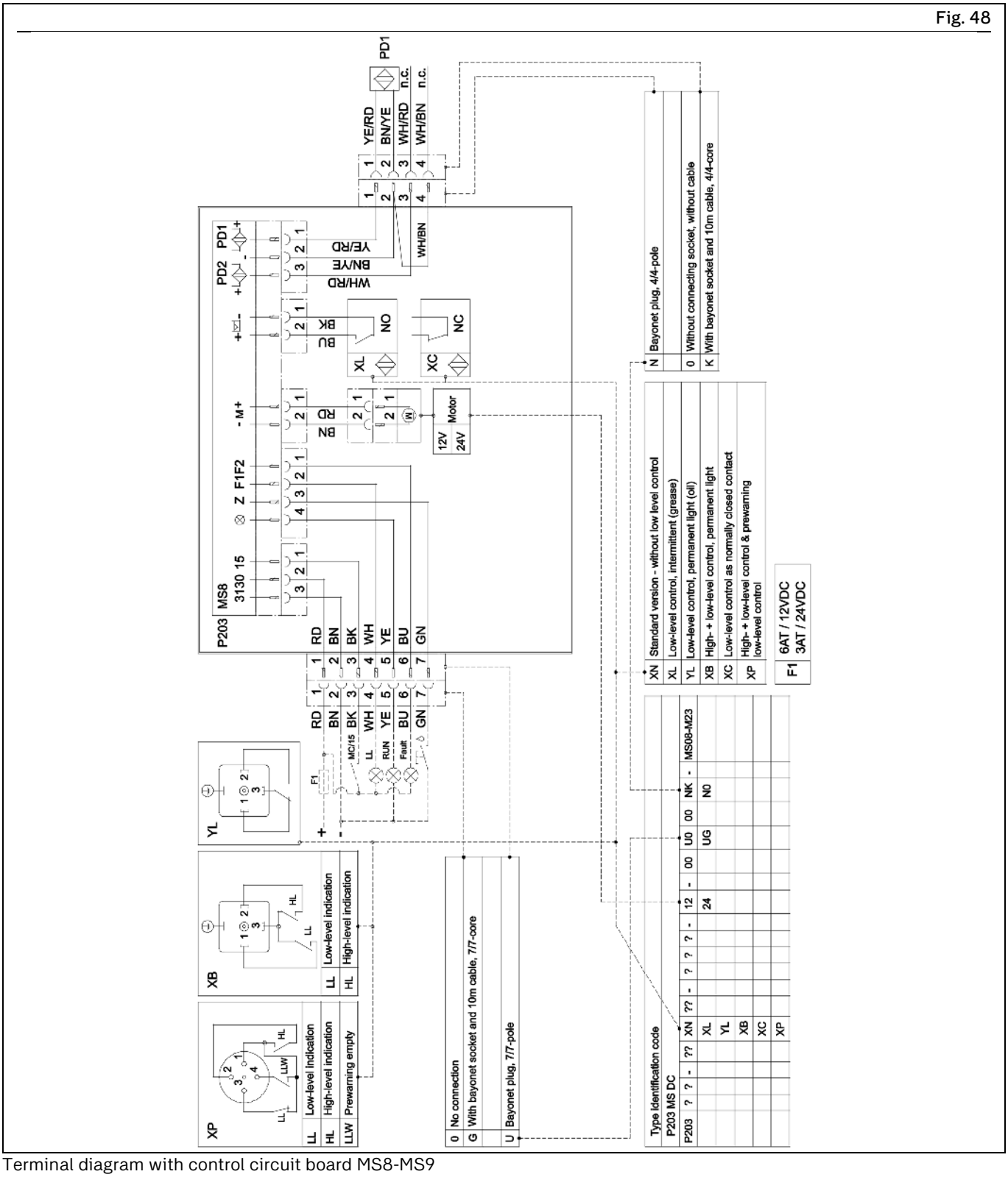

Terminal diagram with control circuit board MS8-MS9

15.2 China RoHS Table

Table 57

部件名称 (Part Name)	有毒害物质或元素 (Hazardous substances)				
	铅	汞	镉	六价铬	多溴联苯
	Lead (Pb)	Mercury (Hg)	Cadmium (Cd)	Hexavalent Chromium (Cr(VI))	Polybrominated biphenyls (PBB)
用钢和黄铜加工的零件 (Components made of machining steel and brass)	X	0	0	0	0
部件名称 (Part Name)	多溴二苯醚	邻苯二甲酸二丁酯	邻苯二甲酸丁苄酯	鄰苯二甲酸二(2-乙基己基)酯	邻苯二甲酸二异丁酯
	Polybrominated diphenyl ethers (PBDE)	Dibutyl phthalate (DBP)	Benzyl butyl phthalate (BBP)	Bis (2-ethylhexyl) phthalate (DEHP)	Diisobutyl phthalate (DIBP)
用钢和黄铜加工的零件 (Components made of machining steel and brass)	0	0	0	0	0

本表格依据SJ/T11364的规定编制 (This table is prepared in accordance with the provisions of SJ/T 11364.)

0:	表示该有毒有害物质在该部件所有均质材料中的含量均在GB/T 26572 规定的限量要求以下。 (Indicates that said hazardous substance contained in all of the homogeneous materials for this part is below the limit requirement of GB/T 26572.)
X:	表示该有毒有害物质至少在该部件的某一均质材料中的含量超出GB/T 26572标准规定的限量要求。 (Indicates that said hazardous substance contained in at least one of the homogeneous materials used for this part is above the limit requirement of GB/T 26572.)

skf.com/lubrication

® SKF and Lincoln are registered trademarks of the SKF Group.
™ eLube is a trademark of the SKF Group.

© SKF Group 2025
Reprint or reproduction of the contents of this information - even in part - is permitted only with SKF's prior written consent.

PUB 951-171-026-EN 11.12.2025