SERVICE & OPERATING MANUAL
Original Instructions

ALEMITE®

Model 8329

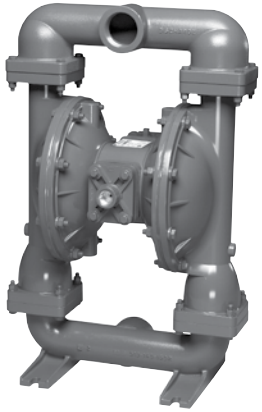

Instructions Sheet: 670991

Table of Contents

Engineering Data and Temperature Limitations 1
Performance Curve 2
Dimensions 3
Metric Dimensions 4
Principle of Pump Operation 5
Installation and Start-Up 5
Air Supply 5
Air Valve Lubrication 5
Air Line Moisture 5
Air Inlet and Priming 5
Between Uses 5
Installation Guide 6
Troubleshooting 7
Recycling 8
Important Safety Information 8
Composite Repair Parts Drawing 9
Composite Repair Parts List & Available Service and Conversion Kits 9
Air Valve Drawing, Parts List, Service Instructions 10
Diaphragm Service Drawing, Non-Overlay 11
Diaphragm Servicing 12
Pilot Valve Servicing, Assembly Drawing & Parts List 13
Actuator Plunger Servicing 14
Check Valve Servicing 15
Check Valve Drawing 15
Pumping Hazardous Liquids 16
Converting Pump for Piping Exhaust Air 16
Converted Exhaust Illustration 16
CE Declaration of Conformity 17

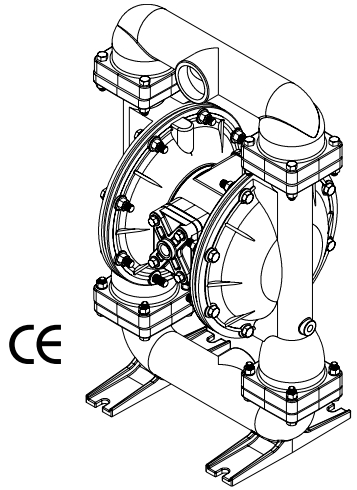

Model 8329 Ball Valve

Air-Operated Double Diaphragm Pump

ENGINEERING, PERFORMANCE & CONSTRUCTION DATA

INTAKE/DISCHARGE PIPE SIZE	CAPACITY	AIR VALVE	SOLIDS-HANDLING	HEADS UP TO	DISPLACEMENT/STROKE
2" NPT (internal) 2" BSP Tapered (internal)	0 to 150 gallons per minute (0 to 567 liters per minute)	No-lube, no-stall design	Up to .25 in. (6mm)	125 psi or 289 ft. of water (8.6 Kg/cm^2 or 86 meters)	.42 Gallon / 1.59 liter

CAUTION! ***Operating temperature limitations are as follows:***

Materials	Operating Temperatures Maximum	Operating Temperatures Minimum
Nitrile: General purpose, oil-resistant. Shows good solvent, oil, water and hydraulic fluid resistance. Should not be used with highly polar solvents like acetone and MEK, ozone, chlorinated hydrocarbons and nitro hydrocarbons.	190° F 88° C	-10° F -23° C

Alemite pumps are designed to be powered only by compressed air.

Performance Curve

Performance based on the following: elastomer fitted pump, flooded suction, water at ambient conditions.
The use of other materials and varying hydraulic conditions may result in deviations in excess of 5%.

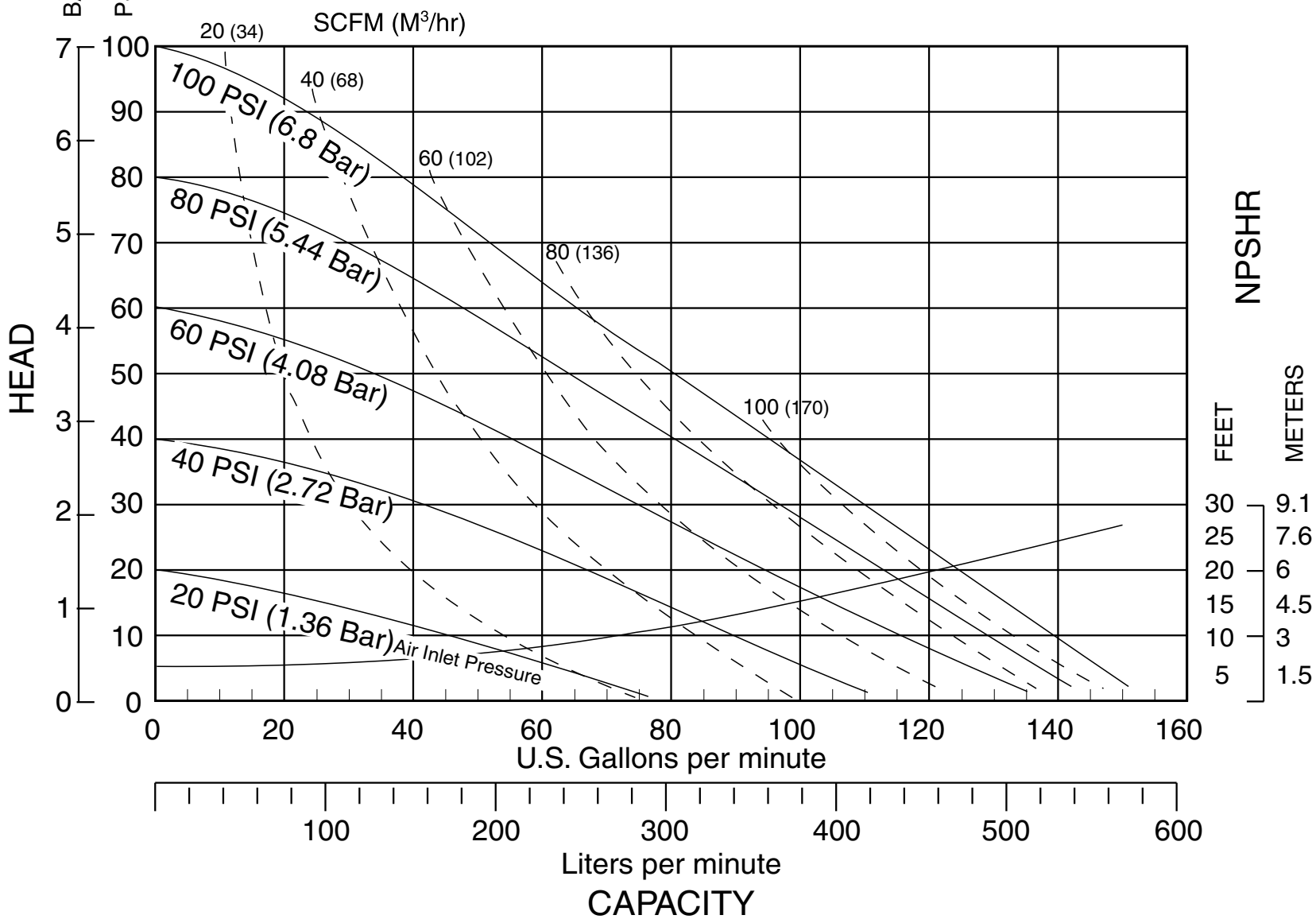

Dimensions

Dimensions in Inches
Dimensional Tolerance: ± 1/8"

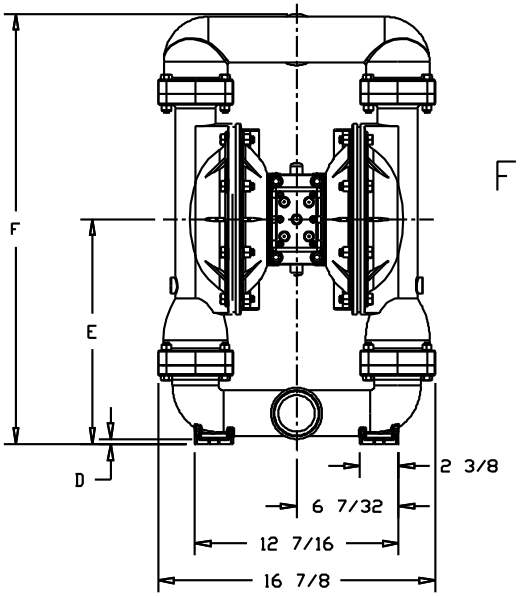

FRONT VIEW

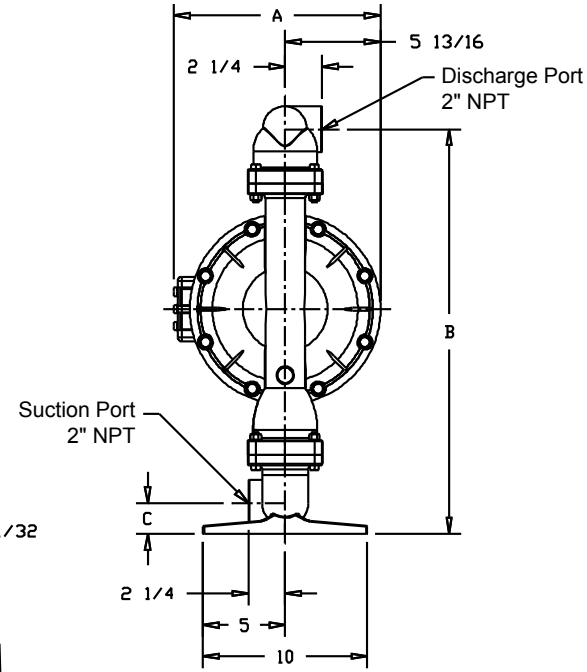

SIDE VIEW

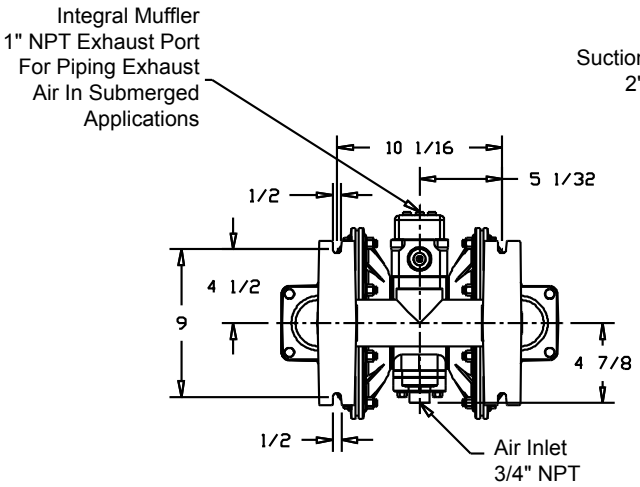

BOTTOM VIEW

Dimension	A	B	C	D	E	F
	12 19/32	24 5/8	1 7/8	5/16	13 11/16	26 3/16

Metric Dimensions

Dimensions in Millimeters
Dimensional Tolerance: ± 3mm

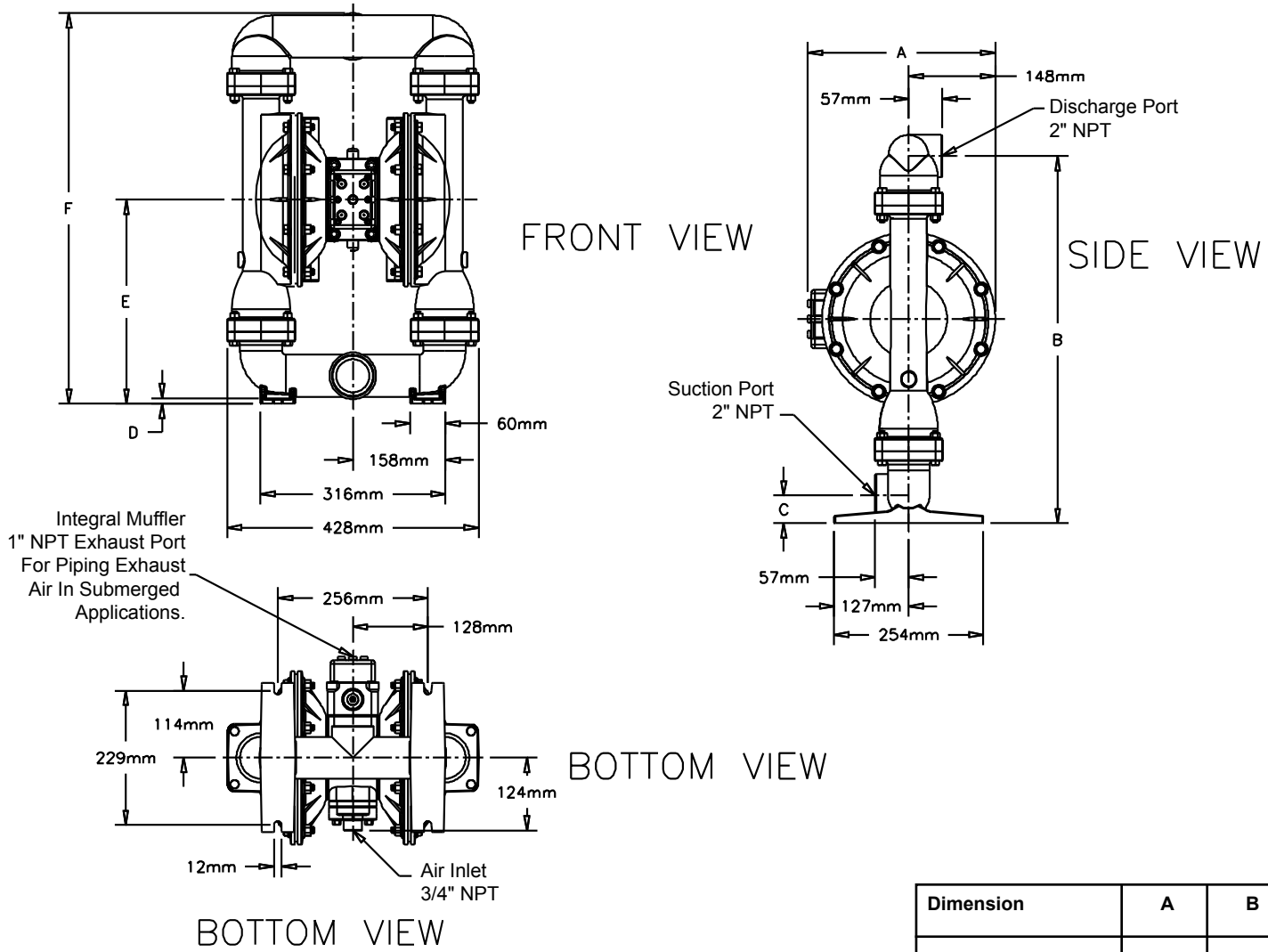

Dimension	A	B	C	D	E	F
	320	625	47	8	348	665

PRINCIPLE OF PUMP OPERATION

This ball type check valve pump is powered by compressed air and is a 1:1 ratio design. The inner side of one diaphragm chamber is alternately pressurized while simultaneously exhausting the other inner chamber. This causes the diaphragms, which are connected by a common rod secured by plates to the centers of the diaphragms, to move in a reciprocating action. (As one diaphragm performs the discharge stroke the other diaphragm is pulled to perform the suction stroke in the opposite chamber.) Air pressure is applied over the entire inner surface of the diaphragm while liquid is discharged from the opposite side of the diaphragm. The diaphragm operates in a balanced condition during the discharge stroke which allows the pump to be operated at discharge heads over 200 feet (61 meters) of water.

For maximum diaphragm life, keep the pump as close to the liquid being pumped as possible. Positive suction head in excess of 10 feet of liquid (3.048 meters) may require a back pressure regulating device to maximize diaphragm life.

Alternate pressurizing and exhausting of the diaphragm chamber is performed by an externally mounted, pilot operated, four way spool type air distribution valve. When the spool shifts to one end of the valve body, inlet pressure is applied to one diaphragm chamber and the other diaphragm chamber exhausts. When the spool shifts to the opposite end of the valve body, the pressure to the chambers is reversed. The air distribution valve spool is moved by a internal pilot valve which alternately pressurizes one end of the air distribution valve spool while exhausting the other end. The pilot valve is shifted at each end of the diaphragm stroke when a actuator plunger is contacted by the diaphragm plate. This actuator plunger then pushes the end of the pilot valve spool into position to activate the air distribution valve.

The chambers are connected with manifolds with a suction and discharge check valve for each chamber, maintaining flow in one direction through the pump.

INSTALLATION AND START-UP

Locate the pump as close to the product being pumped as possible. Keep the suction line length and number of fittings to a minimum. Do not reduce the suction line diameter.

For installations of rigid piping, short sections of flexible hose should be installed between the pump and the piping. The flexible hose reduces vibration and strain to the pumping system. A surge suppressor is recommended to further reduce pulsation in flow.

AIR SUPPLY

Air supply pressure cannot exceed 125 psi (8.6 bar). Connect the pump air inlet to an air supply of sufficient capacity and pressure required for desired performance. When the air supply line is solid piping, use a short length of flexible hose not less than 1/2" (13mm) in diameter between the pump and the piping to reduce strain to the piping. The weight of the air supply line, regulators and filters must be supported by some means other than the air inlet cap. Failure to provide support for the piping may result in damage to the pump. A pressure regulating valve should be installed to insure air supply pressure does not exceed recommended limits.

AIR VALVE LUBRICATION

The air distribution valve and the pilot valve are designed to operate WITHOUT lubrication. This is the preferred mode of operation. There may be instances of personal preference or poor quality air supplies when lubrication of the compressed air supply is required. The pump air system will operate with properly lubricated compressed air supply. Proper lubrication requires the use of an air line lubricator set to deliver one drop of SAE 10 non-detergent oil for every 20 SCFM (9.4 liters/sec.) of air the pump consumes at the point of operation. Consult the pump's published Performance Curve to determine this.

AIR LINE MOISTURE

Water in the compressed air supply can create problems such as icing or freezing of the exhaust air, causing the pump to cycle erratically or stop operating. Water in the air supply can be reduced by using a point-of-use air dryer to supplement the user's air drying equipment. This device removes water from the compressed air supply and alleviates the icing or freezing problems.

AIR INLET AND PRIMING

To start the pump, open the air valve approximately 1/2" to 3/4" turn. After the pump primes, the air valve can be opened to increase air flow as desired. If opening the valve increases cycling rate, but does not increase the rate of flow, cavitation has occurred. The valve should be closed slightly to obtain the most efficient air flow to pump flow ratio.

BETWEEN USES

When the pump is used for materials that tend to settle out or solidify when not in motion, the pump should be flushed after each use to prevent damage. (Product remaining in the pump between uses could dry out or settle out. This could cause problems with the diaphragms and check valves at restart.) In freezing temperatures the pump must be completely drained between uses in all cases.

TYPICAL INSTALLATION GUIDE

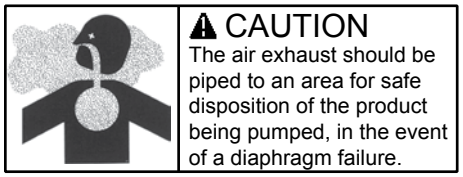

⚠ CAUTION
The air exhaust should be piped to an area for safe disposition of the product being pumped, in the event of a diaphragm failure.

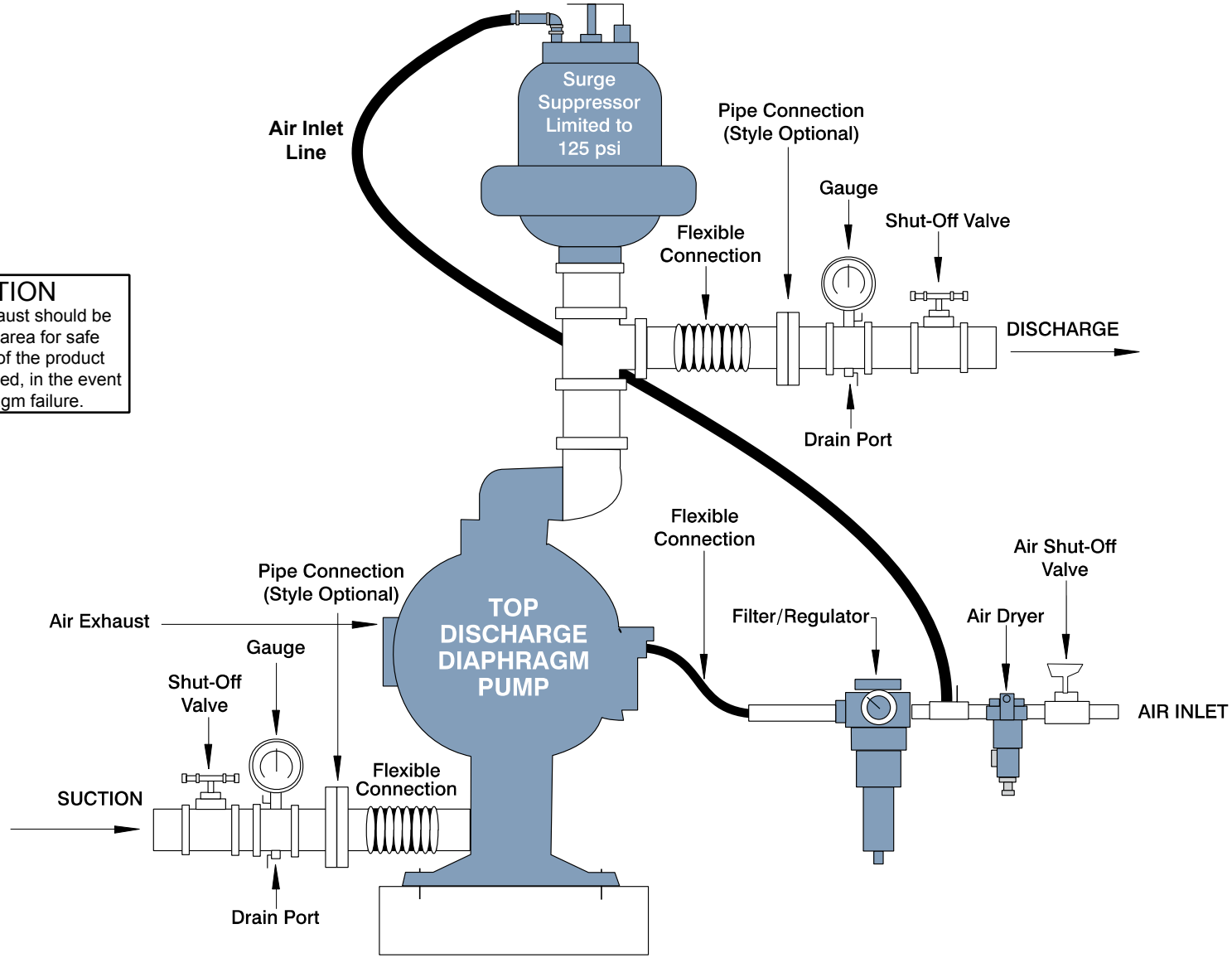

TROUBLESHOOTING

Possible Symptoms:

- Pump will not cycle.
- Pump cycles, but produces no flow.
- Pump cycles, but flow rate is unsatisfactory.
- Pump cycle seems unbalanced.
- Pump cycle seems to produce excessive vibration.

What to Check: Excessive suction lift in system.
Corrective Action: For lifts exceeding 20 feet (6 meters), filling the pumping chambers with liquid will prime the pump in most cases.

What to Check: Excessive flooded suction in system.
Corrective Action: For flooded conditions exceeding 10 feet (3 meters) of liquid, install a back pressure device.

What to Check: System head exceeds air supply pressure.
Corrective Action: Increase the inlet air pressure to the pump. Most diaphragm pumps are designed for 1:1 pressure ratio at zero flow.

What to Check: Air supply pressure or volume exceeds system head.
Corrective Action: Decrease inlet air pressure and volume to the pump as calculated on the published PERFORMANCE CURVE. Pump is cavitating the fluid by fast cycling.

What to Check: Undersized suction line.
Corrective Action: Meet or exceed pump connection recommendations shown on the DIMENSIONAL DRAWING.

What to Check: Restricted or undersized air line.
Corrective Action: Install a larger air line and connection. Refer to air inlet recommendations shown in your pump's SERVICE MANUAL.

What to Check: Check the Externally Serviceable Air Distribution System of the pump.
Corrective Action: Disassemble and inspect the main air distribution valve, pilot valve and pilot valve actuators. Refer to the parts drawing and air valve section of the SERVICE MANUAL. Check for clogged discharge or closed valve before reassembly.

What to Check: Rigid pipe connections to pump.
Corrective Action: Install flexible connectors and a Surge Suppressor.

What to Check: Blocked air exhaust muffler.
Corrective Action: Remove muffler screen, clean or de-ice and reinstall. Refer to the Air Exhaust section of your pump SERVICE MANUAL.

What to Check: Pumped fluid in air exhaust muffler.
Corrective Action: Disassemble pump chambers. Inspect for diaphragm rupture or loose diaphragm plate assembly. Refer to the Diaphragm Replacement section of your pump SERVICE MANUAL.

What to Check: Suction side air leakage or air in product.
Corrective Action: Visually inspect all suction side gaskets and pipe connections.

What to Check: Obstructed check valve.
Corrective Action: Disassemble the wet end of the pump and manually dislodge obstruction in the check valve pocket. Refer to the Check Valve section of the pump SERVICE MANUAL for disassembly instructions.

What to Check: Worn or misaligned check valve or check valve seat.
Corrective Action: Inspect check valves and seats for wear and proper seating. Replace if necessary. Refer to Check Valve section of the pump SERVICE MANUAL for disassembly instructions.

What to Check: Blocked suction line.
Corrective Action: Remove or flush obstruction. Check and clear all suction screens and strainers.

What to Check: Blocked discharge line.
Corrective Action: Check for obstruction or closed discharge line valves.

What to Check: Blocked pumping chamber.
Corrective Action: Disassemble and inspect the wetted chambers of the pump. Remove or flush any obstructions. Refer to the pump SERVICE MANUAL for disassembly instructions.

What to Check: Entrained air or vapor lock in one or both pumping chambers.
Corrective Action: Purge chambers through tapped chamber vent plugs. PURGING THE CHAMBERS OF AIR CAN BE DANGEROUS! Contact Technical Services before performing this procedure. Any model with top-ported discharge will reduce or eliminate problems with entrained air.

If your pump continues to perform below your expectations, contact Technical Services for a service evaluation.

Recycling

Many components of Alemite Metallic AODD pumps are made of recyclable materials. We encourage pump users to recycle worn out parts and pumps whenever possible, after any hazardous pumped fluids are thoroughly flushed.

CE

IMPORTANT SAFETY INFORMATION

⚠ IMPORTANT

Read these safety warnings and instructions in this manual completely, before installation and start-up of the pump. It is the responsibility of the purchaser to retain this manual for reference. Failure to comply with the recommendations stated in this manual will damage the pump, and void factory warranty.

⚠ CAUTION

Before pump operation, inspect all gasketed fasteners for looseness caused by gasket creep. Re-torque loose fasteners to prevent leakage. Follow recommended torques stated in this manual.

⚠ WARNING

Before maintenance or repair, shut off the compressed air line, bleed the pressure, and disconnect the air line from the pump. The discharge line may be pressurized and must be bled of its pressure.

⚠ WARNING

In the event of diaphragm rupture, pumped material may enter the air end of the pump, and be discharged into the atmosphere. If pumping a product which is hazardous or toxic, the air exhaust must be piped to an appropriate area for safe disposition.

⚠ WARNING

This pump is pressurized internally with air pressure during operation. Always make certain that all bolting is in good condition and that all of the correct bolting is reinstalled during assembly.

⚠ WARNING

When used for toxic or aggressive fluids, the pump should always be flushed clean prior to disassembly.

⚠ WARNING

Before doing any maintenance on the pump, be certain all pressure is completely vented from the pump, suction, discharge, piping, and all other openings and connections. Be certain the air supply is locked out or made non-operational, so that it cannot be started while work is being done on the pump. Be certain that approved eye protection and protective clothing are worn all times in the vicinity of the pump. Failure to follow these recommendations may result in serious injury or death.

⚠ WARNING

Airborne particles and loud noise hazards.

Wear ear and eye protection.

Composite Parts List

ITEM		DESCRIPTION	QTY
1	■	Air Valve Assembly	1
2	▲	Ball, Check	4
3		Bushing	2
4	■	Pilot Valve Assembly	1
5		Intermediate Bracket	1
6	◆ ■	Bumper, Diaphragm	2
7	◆ ■	Bushing, Plunger	2
8		Cap, Air Inlet Assembly	1
9		Capscrew, Hex Hd 3/8-16 X 2.25	16
10		Capscrew, Hex Hd 7/16-14 X 2.00	16
11		Capscrew, Hex Hd 5/16-18 X 1.75	4
12		Capscrew, Hex HD 3/8-16 X 1.00	4
13		Capscrew, Soc Hd 7/16-14 x 1.25	8
14		Chamber, Outer	2
15		Chamber, Inner	2
18	▲	Diaphragm	2
19	◆ ■	Gasket, Air Valve	1
20	◆ ■	Gasket, Pilot Valve	1
21	◆ ■	Gasket, Air Inlet	1
22	◆ ■	Gasket, Inner Chamber	2
23		Manifold, Suction	1
24		Manifold, Discharge	1
25		Nut, Hex 3/8-16	16
26		Nut, Hex 7/16-14	16
27	◆ ■	O-Ring	2
28		Plate, Inner Diaphragm	2
29		Plate, Outer Diaphragm Assembly	2
32	■	Plunger, Actuator	2
33	◆ ■	Ring, Retaining	2
34		Rod, Diaphragm	1
35	◆ ■	Seal, Diaphragm Rod	2
36	▲	Seat, Check Ball	4
37		Washer, Lock	16
38		Washer, Flat 5/16	4

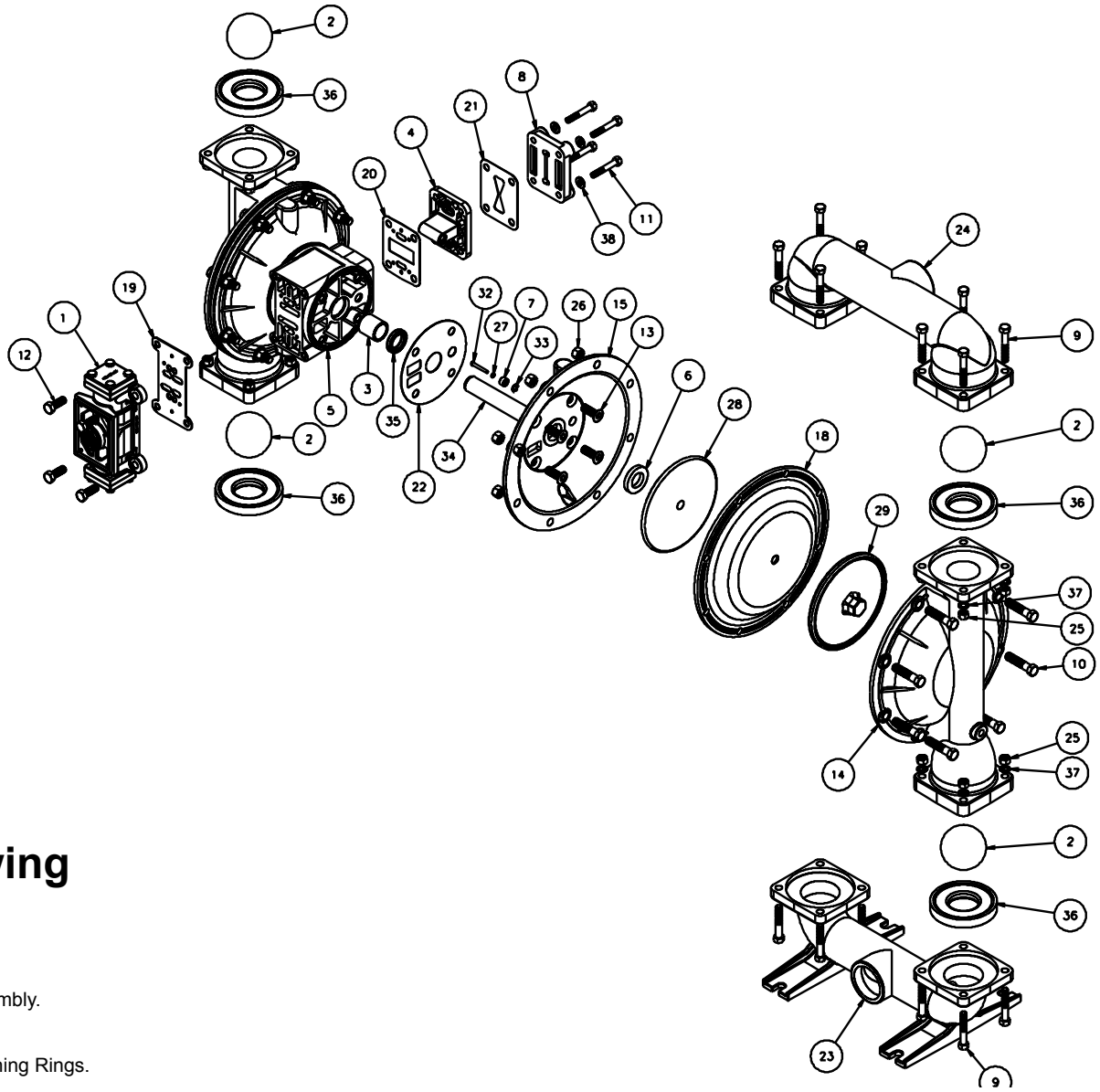

Composite Repair Parts Drawing

Available Service And Conversion Kits

393801-18 ■ **AIR END KIT**
Seals, O-ring, Gaskets, Retaining Rings, Air Valve Assembly, Plungers, Bushings and Pilot Valve Assembly.

393801-23 ◆ **SEAL KIT**
O-Rings, Gaskets, Seal, Bumpers, Bushings, Retaining Rings.

393801-11 ▲ **WET END KIT**
Nitrile Diaphragms, Nitrile Balls, and Nitrile Seats.

Air Valve Servicing, Assembly Drawing & Parts List

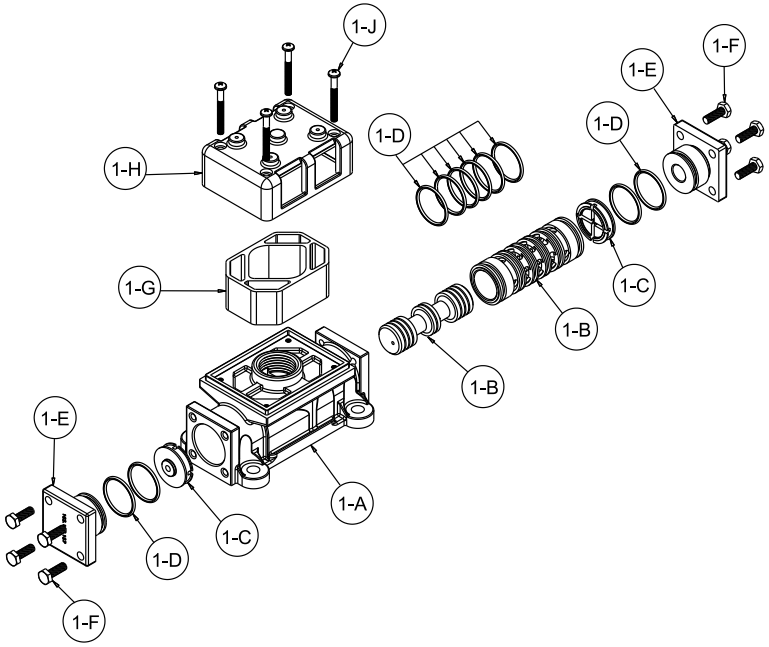

AIR VALVE ASSEMBLY PARTS LIST

	Item	Description	Qty
■	**1**	**Air Valve Assembly**	**1**
	1-A	Body, Air Valve	1
	1-B	Sleeve and Spool Set	1
◆	1-C	Bumper	2
◆	1-D	O-Ring	10
	1-E	Cap, End	2
	1-F	Hex Head Capscrew 1/4-20 x .75	8
	1-G	Muffler	1
	1-H	Muffler Cap	1
	1-J	Machine Screw	4

AIR DISTRIBUTION VALVE SERVICING

To service the air valve first shut off the compressed air, bleed pressure from the pump, and disconnect the air supply line from the pump.

Step #1: See COMPOSITE REPAIR PARTS DRAWING.

Using a 9/16" wrench or socket, remove the four hex capscrews (items 12). Remove the air valve assembly from the pump.

Remove and inspect gasket (item 19) for cracks or damage. Replace gasket if needed.

Step #2: Disassembly of the air valve.

Using a 7/16" wrench or socket, remove the eight hex capscrews (items 1-F) that fasten the end caps to the valve body. Next remove the two end caps (items 1-E). Inspect the two o-rings (items 1-D) on each end cap for damage or wear. Replace the bumpers as needed.

Remove the bumpers (items 1-C). Inspect the bumpers for damage or wear. Replace the bumpers as needed.

Remove the spool (part of item 1-B) from the sleeve. Be careful not to scratch or damage the outer diameter of the spool. Wipe spool with a soft cloth and inspect for scratches or wear.

Inspect the inner diameter of the sleeve (part of item 1-B) for dirt, scratches, or other contaminants. Remove the sleeve if needed and replace with a new sleeve and spool set (item 1-B).

Step #3: Reassembly of the air valve.

Install one bumper (item 1-C) and one end cap (item 1-E), with two o-rings (items 1-D), and fasten with four hex capscrews (items 1-F) to the valve body (item 1-A).

Remove the new sleeve an spool set (item 1-B) from the plastic bag. Carefully remove the spool from the sleeve. Install the six o-rings (item 1-D) into the six grooves on the sleeve. Apply a light coating of grease to the o-rings before installing the sleeve into the valve body (item 1-A), align the slots in the sleeve with the slots in the valve body. Insert the spool into the sleeve. Be careful not to scratch or damage the spool during installation. Carefully insert the sleeve into the bumper and end cap (with o-rings) and fasten with the remaining hex capscrews.

Fasten the air valve assembly (item 1) and gasket to the pump. Connect the compressed air line to the pump. The pump is now ready for operation.

⚠ IMPORTANT

Read these instructions completely, before installation and start-up. It is the responsibility of the purchaser to retain this manual for reference. Failure to comply with the recommendations stated in this manual will damage the pump, and void factory warranty.

Diaphragm Service Drawing

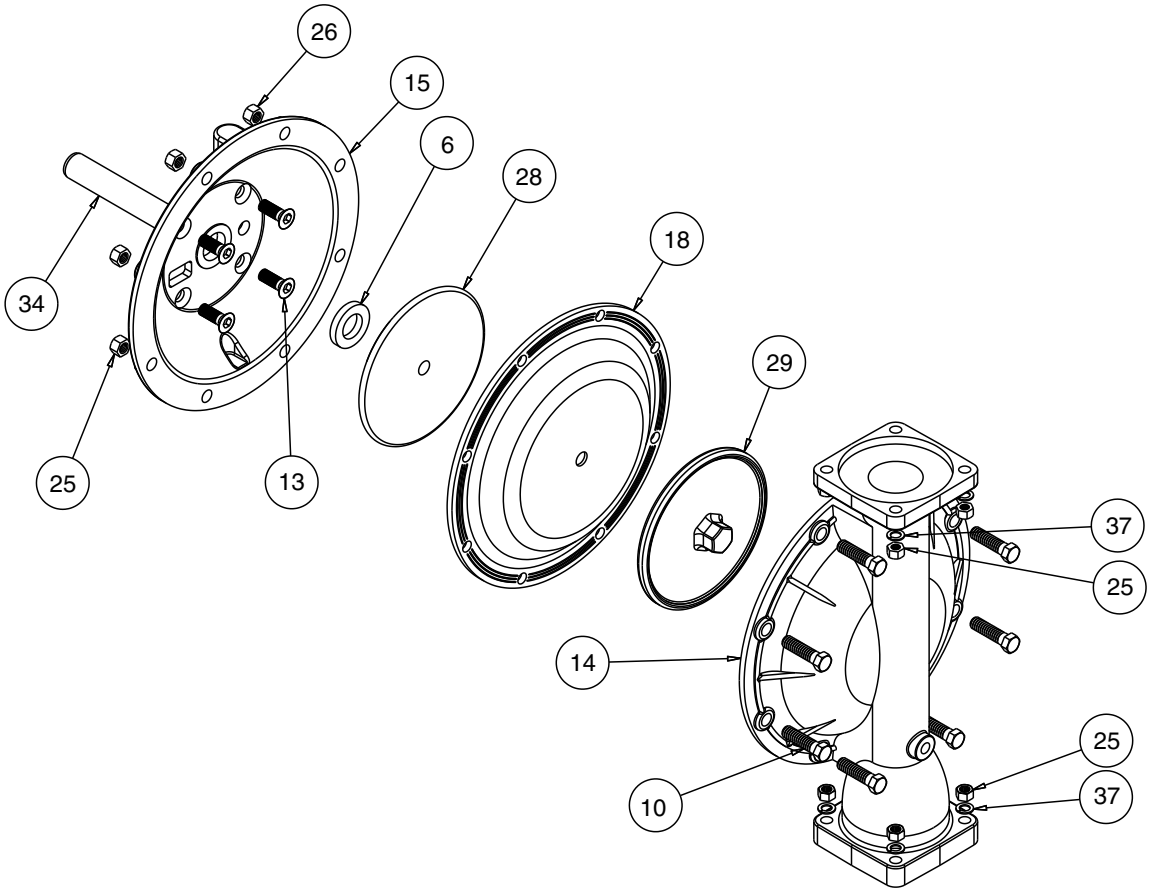

DIAPHRAGM SERVICING

To service the diaphragms first shut off the suction, then shut off the discharge lines to the pump. Shut off the compressed air supply, bleed the pressure from the pump, and disconnect the air supply line from the pump. Drain any remaining liquid from the pump.

Step #1: See the pump assembly drawing, and the diaphragm servicing illustration.

Using a 9/16" wrench or socket, remove the 16 capscrews (item 9), hex nuts, and lockwashers that fasten the manifolds (items 23 & 24) to the outer chambers (item 14).

Step #2: Removing the outer chambers.

Using a 11/16" and a 5/8" wrench or socket, remove the 16 capscrews (item 10), and hex nuts that fasten the outer chambers, diaphragms, and inner chambers together.

Step #3: Removing the diaphragm assemblies.

Use a $1^{1}/_{16}$" (27mm) wrench or six pointed socket to remove the diaphragm assemblies (outer plate, diaphragm, and inner plate) from the diaphragm rod (item 34) by turning counterclockwise.

Insert a 1/4-20 capscrew or set screw into the smaller tapped hole in the inner diaphragm plate (item 28 or 30). Insert the protruding stud and the 1/4-20 fastener loosely into a vise. Use a $1^{1}/_{16}$" wrench or socket to remove the outer diaphragm plate (item 29 or 31) by turning counter-clockwise. Inspect the diaphragm (item 16) for cuts, punctures, abrasive wear or chemical attack. Replace the diaphragms if necessary.

Step #4: Installing the diaphragms.

Push the threaded stud of the outer diaphragm plate through the center hole of the diaphragm. Thread the inner plate clockwise onto the stud. Insert the loose assembly with the above 1/4-20 fastener back into the vise. Use a torque wrench to tighten the diaphragm assembly together to 480 in. lbs. (54.23 Newton meters). Allow a minimum of 15 minutes to elapse after torquing, then re-torque the assembly to compensate for stress relaxation in the clamped assembly.

Step #5: Installing the diaphragm assemblies to the pump.

Make sure the bumper (item 6) is installed over the diaphragm rod.

Thread the stud of the one diaphragm assembly clockwise into the tapped hole at the end of the diaphragm rod (item 34) until the inner diaphragm plate is flush to the end of the rod. Insert rod into pump.

Align the bolt holes in the diaphragm with the bolt pattern in the inner chamber (item 15).

Fasten the outer chamber (item 14) to the pump, using the capscrews (item 9), and hex nuts.

On the opposite side of the pump, pull the diaphragm rod out as far as possible. Make sure the bumper (item 6) is installed over the diaphragm rod.

Thread the stud of the remaining diaphragm assembly clockwise into the tapped hole at the end of the diaphragm rod (item 34) as far as possible and still allow for alignment of the bolt holes in the diaphragm with the bolt pattern in the inner chamber (item 15).

Fasten the remaining outer chamber (item 14) to the pump, using the capscrews (items 10), hex nuts, and lockwashers.

Step #6: Re-install the manifolds to the pump, using the capscrews (item 10), hex nuts and flat washers.

The pump is now ready to be re-installed, connected and returned to operation.

⚠ IMPORTANT

Read these instructions completely, before installation and start-up. It is the responsibility of the purchaser to retain this manual for reference. Failure to comply with the recommendations stated in this manual will damage the pump, and void factory warranty.

Pilot Valve Servicing, Assembly Drawing & Parts List

PILOT VALVE ASSEMBLY PARTS LIST

	ITEM	DESCRIPTION	QTY
■	4	Pilot Valve Assembly	1
	4-A	Valve Body	1
	4-B	Sleeve (With O-rings)	1
◆	4-C	O-ring (Sleeve)	6
	4-D	Spool (With O-rings)	1
◆	4-E	O-ring (Spool)	3
	4-F	Retaining Ring	1

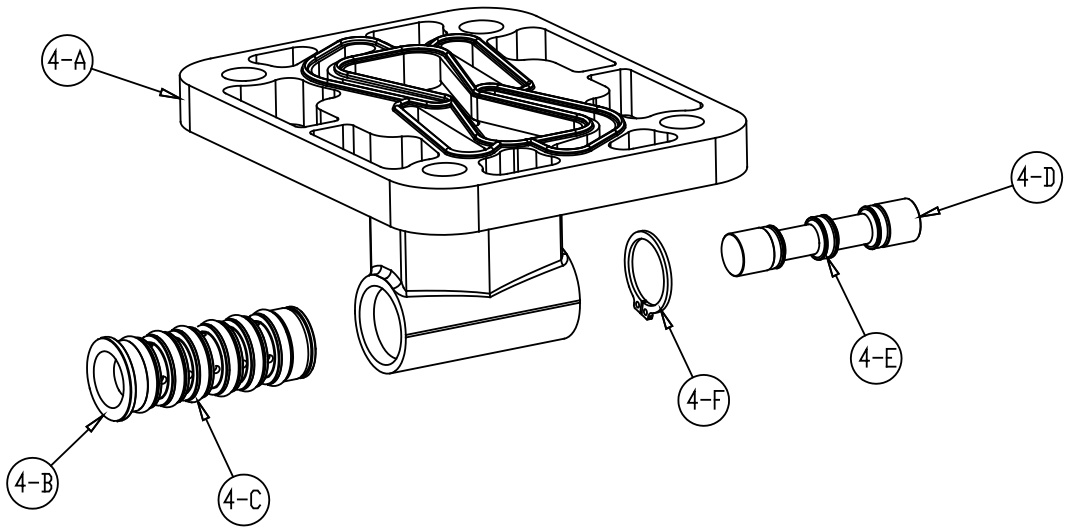

PILOT VALVE SERVICING

To service the pilot valve first shut off the compressed air supply, bleed the pressure from the pump, and disconnect the air supply line from the pump.

STEP #1: See pump assembly drawing.

Using a 1/2" wrench or socket, remove the four capscrews (item 11). Remove the air inlet cap (item 8) and air inlet gasket (item 21). The pilot valve assembly (item 4) can now be removed for inspection and service.

STEP #2: Disassembly of the pilot valve.

Remove the pilot valve spool (item 4-D). Wipe clean and inspect spool and o-rings for dirt, cuts or wear. Replace the o-rings and spool if necessary.

Remove the retaining ring (item 4-F) from the end of the sleeve (item 4-B) and remove the sleeve from the valve body (item 4-A). Wipe clean and inspect sleeve and o-rings for dirt, cuts or wear. Replace the o-rings and sleeve if necessary.

STEP #3: Re-assembly of the pilot valve.

Generously lubricate outside diameter of the sleeve and o-rings. Then carefully insert sleeve into valve body. Take CAUTION when inserting sleeve, not to shear any o-rings. Install retaining ring to sleeve. Generously lubricate outside diameter of spool and o-rings. Then carefully insert spool into sleeve. Take CAUTION when inserting spool, not to shear any o-rings. Use BP-LS-EP-2 multipurpose grease, or equivalent.

STEP #4: Re-install the pilot valve assembly into the intermediate.

Be careful to align the ends of the pilot valve stem between the plunger pins when inserting the pilot valve into the cavity of the intermediate.

Re-install the gasket, air inlet cap and capscrews. Connect the air supply to the pump. The pump is now ready for operation.

ACTUATOR PLUNGER SERVICING

To service the actuator plunger first shut off the compressed air supply, bleed the pressure from the pump, and disconnect the air supply line from the pump.

Step #1: See PUMP ASSEMBLY DRAWING.

Using a 1/2" wrench or socket, remove the four capscrews (items 11). Remove the air inlet cap (item 8) and air inlet gasket (item 21). The pilot valve assembly (item 4) can now be removed.

Step #2: Inspect the actuator plungers.

See ILLUSTRATION AT RIGHT.

The actuator plungers (items 32) can be reached through the pilot valve cavity in the intermediate assembly (item 5).

Remove the plungers (item 32) from the bushings (item 7) in each end of the cavity. Inspect the installed o-ring (items 27) for cuts and/or wear. Replace the o-rings if necessary. Apply a light coating of grease to each o-ring and re-install the plungers in to the bushings. Push the plungers in as far as they will go.

To remove the bushings (item 7), first remove the retaining rings (item 33) by using a flat screwdriver. **NOTE**: It is recommended that new retaining rings be installed.

Step #3: Re-install the pilot valve assembly into the intermediate assembly.

Be careful to align the ends of the stem between the plungers when inserting the stem of the pilot valve into the cavity of the intermediate.

Re-install the gasket (item 21), air inlet cap (item 8) and capscrews (item 11).

Connect the air supply to the pump. The pump is now ready for operation.

⚠ IMPORTANT

Read these instructions completely, before installation and start-up. It is the responsibility of the purchaser to retain this manual for reference. Failure to comply with the recommendations stated in this manual will damage the pump, and void factory warranty.

Actuator Plunger Drawing

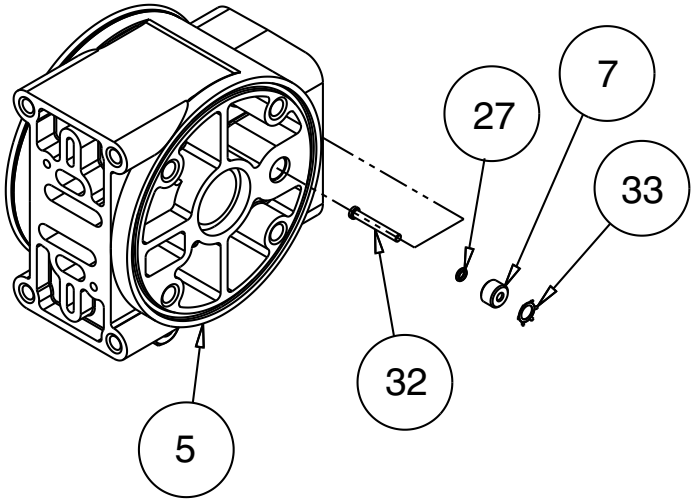

CHECK VALVE SERVICING

Before servicing the check valve components, first shut off the suction line and then the discharge line to the pump. Next, shut off the compressed air supply, bleed air pressure from the pump, and disconnect the air supply line from the pump. Drain any remaining fluid from the pump. The pump can now be removed for service.

To access the check valve components, remove the manifold (item 23 or item 24 not shown). Use a 9/16" wrench or socket to remove the fasteners. Once the manifold is removed, the check valve components can be seen.

Inspect the check balls (items 2) for wear, abrasion, or cuts on the spherical surface. The check valve seats (item 36) should be inspected for cuts, abrasive wear, or embedded material on the surfaces of both the external and internal chambers. The spherical surface of the check balls must seat flush to the surface of the check valve seats for the pump to operate to peak efficiency. Replace any worn or damaged parts as necessary.

Re-assemble the check valve components. The seat should fit into the counter bore of the outer chamber.

The pump can now be reassembled, reconnected and returned to operation.

Check Valve Drawing

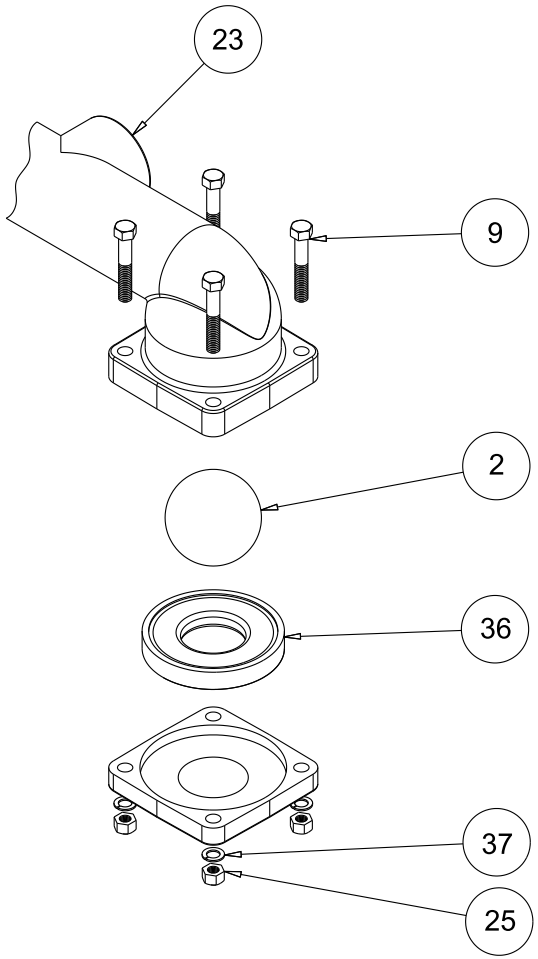

PUMPING HAZARDOUS LIQUIDS

When a diaphragm fails, the pumped liquid or fumes enter the air end of the pump. Fumes are exhausted into the surrounding environment. When pumping hazardous or toxic materials, the exhaust air must be piped to an appropriate area for safe disposal. See illustration #1 at right.

This pump can be submerged if the pump materials of construction are compatible with the liquid being pumped. The air exhaust must be piped above the liquid level. See illustration #2 at right. Piping used for the air exhaust must not be smaller than 1" (2.54 cm) diameter. Reducing the pipe size will restrict air flow and reduce pump performance. When the pumped product source is at a higher level than the pump (flooded suction condition), pipe the exhaust higher than the product source to prevent siphoning spills. See illustration #3 at right.

CONVERTING THE PUMP FOR PIPING THE EXHAUST AIR

The following steps are necessary to convert the pump to pipe the exhaust air away from the pump.

Remove the muffler. The air distribution valve (item 1) has 1" NPT threads for piped exhaust.

IMPORTANT INSTALLATION NOTE: The manufacturer recommends installing a flexible conductive hose or connection between the pump and any rigid plumbing. This reduces stresses on the molded threads of the air exhaust port. Failure to do so may result in damage to the air distribution valve body.

Any piping or hose connected to the pump's air exhaust port must be conductive and physically supported. Failure to support these connections could also result in damage to the air distribution valve body.

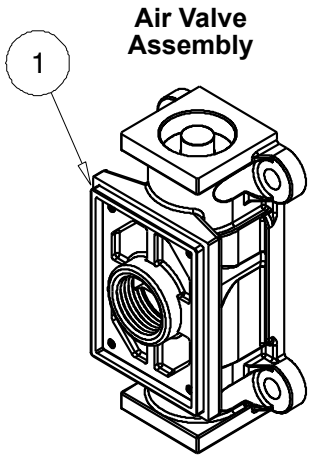

CONVERTED EXHAUST ILLUSTRATION

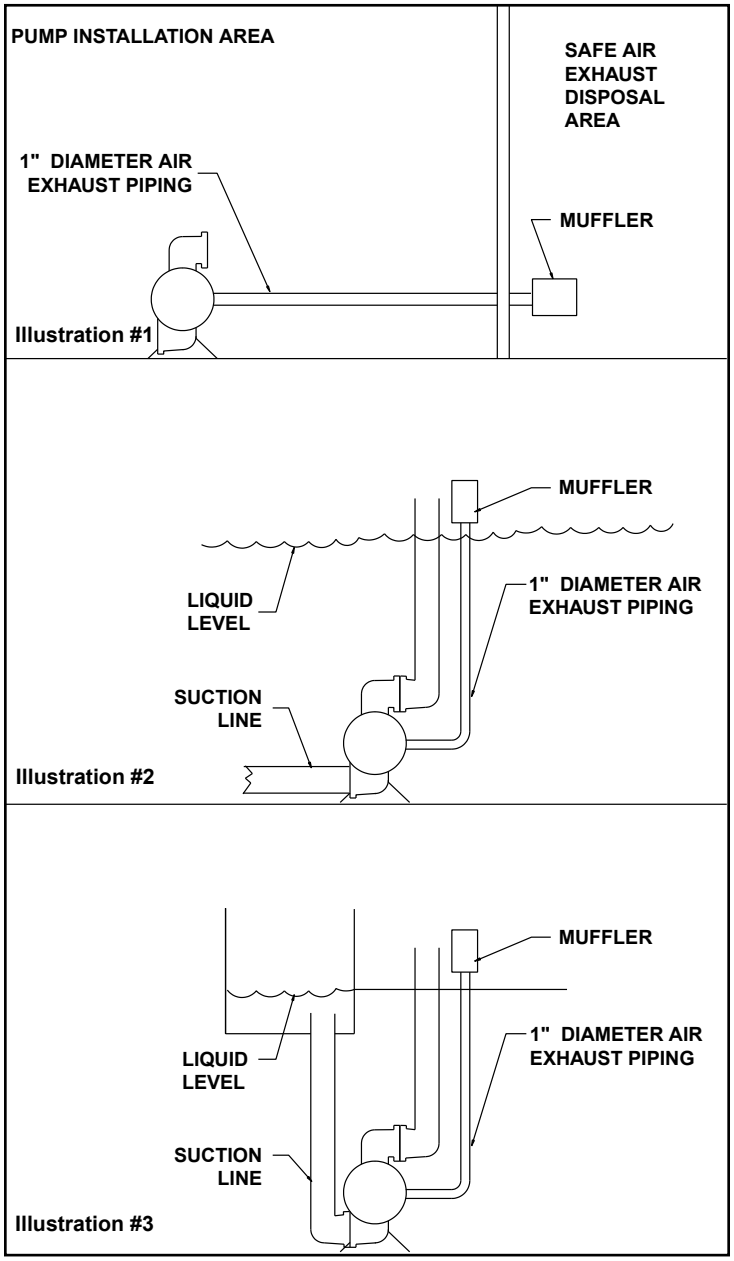

Declaration of Conformity

ALEMITE

Declaration of Conformity

Alemite, LLC, 167 Roweland Drive, Johnson City, TN 37061, USA
certifies that Air-Operated Double Diaphragm Pumps: Model 8300 Series comply with the European Community Directive 2006/42/EC on Machinery, according to Annex VIII. This product has used Harmonized Standard EN 809, Pumps and Pump Units for Liquids - Common Safety Requirements, to verify conformance.

Signature of authorized person

October 19, 2009
Date of issue

ROBERT HOEFLER
Printed name of authorized person

ENGINEERING MANAGER
Title

Revision Level: None

July 28, 2010
Date of revision

CE

Declaration of Conformity