ATEX progressive metering devices of the series PSG1, PSG2, PSG3

Operating instructions

according to ATEX Directive 2014/34/EU

EN

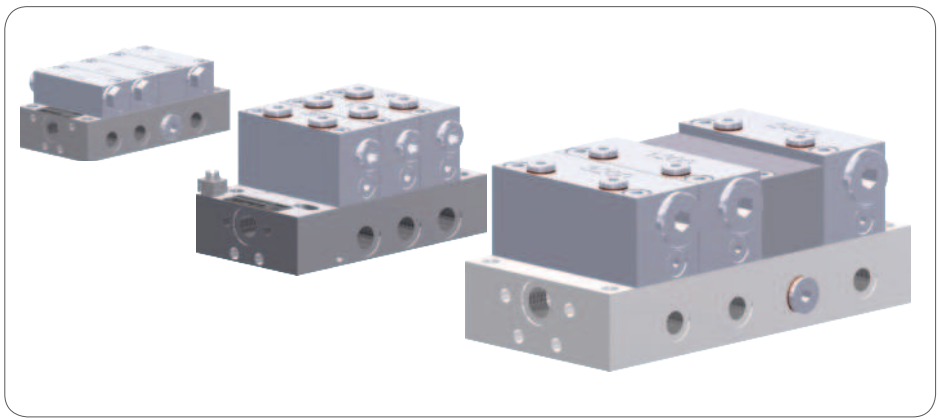

Version 01
951-180-085-EN

LINCOLN

SKF

EU Declaration of Conformity pursuant to ATEX Directive 2014/34/EU, Annex X

The manufacturer, SKF Lubrication Systems Germany GmbH, Hockenheim Plant, 2. Industriestr. 4, DE - 68766 Hockenheim hereby declares the conformity of the device:

Designation: **Progressive metering devices,** **Series: PSG1; PSG2 and PSG3**

Part Number: **24-3830-*, 24-3850-*, 24-3810-*, 24-3820-***

Year of manufacture: See type plate

Explosion protection marking:

II 1G IIC T6 Ga /-20...+70°C	II 1D IIIC T90°C Da / -20 ...+70°C	Progressive metering device with proximity switch 24-1884-2288
II 2G IIC T6...T1 Gb/-20...+85°C	II 1D IIIC T135°C Da / -20...+85°C	Progressive metering device with proximity switch 24-1884-2613
II 2G IIB T4 Gb /-20...+40°C	II 2D IIIC T135°C Db / -20...+40°C	Progressive metering device with proximity switch 24-1884-2613 and 2/2 directional solenoid valve 24-1254-2212
II 2G IIC T6 Gb/-20...+70°C	II 1D IIIC T90°C Da / -20...+70°C	Progressive metering device with proximity switch 24-1884-2292
II 2G IIB T4 Gb /-20...+40°C	II 2D IIIC T135°C Db / -20...+40°C	Progressive metering device with 2/2 directional solenoid valve 24-1254-2212
II 2G IIB T4 Gb /-20...+40°C	II 2D IIIC T135°C Db / -20...+40°C	Progressive metering device with proximity switch 24-1884-2292 and 2/2 directional solenoid valve 24-1254-2212

with all relevant harmonization provisions of the following Directives at the time of placing on the market.

The technical documentation pursuant to: ATEX Directive 2014/34/EU Annex VIII No. 2 has been prepared. Furthermore, the following Directives and (harmonized) standards were applied in the applicable areas:

Standard	Edition	Standard	Edition	Standard	Edition	Directives	Edition
EN ISO 80079-36	2016	EN 50581:2012		EN 60947-5-6	2000	2014/30/EU	2014
EN 1127-1	2011	EN 60947-5-2	2007/A1:2012			2011/65/EU RoHS II	2011

The device must not be put into service until the machinery into which it is to be incorporated has been declared in conformity with the provisions of ATEX Directive 2014/34/EU and all other applicable Directives.

Hockenheim, 10/2/2019

Jürgen Kreutzkämper
Manager R&D Germany - SKF Lubrication Business Unit

Stefan Schürmann
Manager R&D Hockenheim/Walldorf - SKF Lubrication Business Unit

951-180-085-EN
Version 01

Masthead

Manufacturer
SKF Lubrication Systems Germany GmbH
Address of manufacturer plants
Headquarters
Walldorf Plant
Heinrich-Hertz-Str. 2-8
69190 Walldorf
Germany
Tel: +49 (0) 6227 33-0
Fax: +49 (0) 6227 33-259

Berlin Plant
Motzener Straße 35/37
12277 Berlin
Germany
Tel. +49 (0)30 72002-0
Fax +49 (0)30 72002-111

E-mail: Lubrication-germany@skf.com
www.skf.com/lubrication

Training
SKF conducts detailed training in order to enable the maximum safety and efficiency. SKF recommends taking advantage of this training. For information, contact the relevant SKF service address.

Copyright
© SKF. All rights reserved.

Warranty
The instructions do not contain any information on the warranty. This can be found in our General Terms and Conditions.

Notes on operating instructions

These operating instructions are operating instructions in accordance with ATEX Directive 2014/34/EC.

Disclaimer of liability
The manufacturer shall not be held liable for damage resulting from:

- Improper usage, assembly, operation, configuration, maintenance, repair, or accidents
- Improper reaction to malfunctions
- Unauthorized modifications to the product
- Intentional or gross negligence
- Use of non-original SKF spare components

The maximum liability for loss or damage resulting from the use of our products is limited to the purchase price. Liability for indirect damage of any kind is excluded.

Table of contents

Masthead **3**
Explanation of symbols and signs **7**

1. Safety instructions **9**
1.1 General safety instructions 9
1.2 General behavior when handling the product 9
1.3 Intended use 10
1.4 Modifications to the product 10
1.5 Foreseeable misuse 11
1.6 Prohibition of certain activities 12
1.7 Painting plastic components 12
1.8 Inspections prior to delivery 12
1.9 Referenced documents 12
1.10 Markings on the product 13
1.11 Notes on the type plate 13
1.12 Note on CE marking 13
1.13 Explosion protection marking in accordance with Directive 2014/34/EU 14
1.14 Persons authorized to use the product 14
1.14.1 Operator 14
1.14.2 Qualified mechanic 14
1.14.3 Qualified electrician 15
1.14.4 Specialist in maintenance and servicing in potentially explosive atmospheres 15
1.15 Instruction of outside fitters 15
1.16 Provision of personal protective gear 15
1.17 Operation 15
1.18 Emergency shutdown 15
1.19 Transport, assembly, maintenance, malfunction, repair, shutdown, disposal 16
1.20 First start-up, daily start-up 17
1.21 Cleaning 18
1.22 Special safety instructions regarding explosion protection 18
1.23 Nullification of ATEX approval 20
1.24 Operation in potentially explosive atmospheres 20
1.25 Explosion protection marking 21
1.26 Obligations of the operator 21
1.26.1 Identification of hazards 21
1.26.2 Explosion protection measures 21
1.26.4 Duty to provide instruction and training 22
1.26.3 Provision of necessary information 22
1.27 Residual risks 23
1.28 Residual ATEX risks 24

2. Lubricants **26**
2.1 General information 26
2.2 Selection of lubricants 26
2.3 Material compatibility 26
2.4 Temperature properties 26
2.5 Aging of lubricants 27
2.5.1 Solid lubricants 28

3. Overview, functional description **29**
3.1 Overview of progressive metering devices 29
3.2 ATEX marking according to Directive 2014/34/EU (ATEX) 29
3.3 Information on volume data 30
3.4 Functioning of a PSG progressive metering device 31
3.5 Information on the design of a PSG progressive metering device 32
3.6 Dummy module 33
3.7 Consolidation of outlets 33
3.8 Overview of a general progressive system 34

3.8.1 Functional description of a general progressive system 35
3.9 Overview of PSG1 progressive metering device series 36
3.10 Overview of PSG2 progressive metering device series 37
3.11 Overview of PSG3 progressive metering device series 38

4. Technical data 39
4.1 PSG1-ATEX General technical data 39
4.1.1 PSG1 - Basic metering device 39
4.1.2 PSG1 pressure-loss diagram 41
4.1.3 PSG1 with inductive proximity switch 42
4.2 PSG2-ATEX General technical data 43
4.2.1 PSG2 - Basic metering device 43
4.2.2 PSG2 with 2/2 directional solenoid valve 45
4.2.3 PSG2 with inductive proximity switch 24-1884-2292 46
4.2.4 PSG2 with inductive proximity switch 24-1884-2613 47
4.3 PSG3-ATEX General technical data 48
4.3.1 PSG3 - Basic metering device 48
4.3.2 PSG3 with inductive proximity switch 24-1884-2292 50

5. Delivery, returns, storage 51
5.1 Delivery 51
5.2 Return shipment 51
5.3 Storage 51
5.4 Storage temperature range 52
5.5 Storage conditions for parts filled with lubricant 52
5.5.1 Storage period up to 6 months 52
5.5.2 Storage period between 6 and 18 months 53
5.5.3 Storage period more than 18 months 53

6. Assembly 54
6.1 General information 54
6.2 Assembly location 54
6.3 Mechanical connection 55
6.3.1 Minimum mounting dimensions 55
6.4 Installing the PSG1 56
6.4.1 Basic design PSG1-ATEX 56
6.4.2 PSG1 tightening torques 57
6.4.3 PSG1-ATEX with visual cycle indicator (ZY) 58
6.4.4 PSG1-ATEX with visual cycle indicator, housing, and inductive proximity switch (ZS) 59
6.5 Assembly PSG2-ATEX 60
6.5.1 Basic design PSG2-ATEX 60
6.5.2 PSG2 tightening torques 61
6.5.3 PSG2-ATEX with visual cycle indicator (ZY) 62
6.5.4 PSG2-ATEX with pressure-resistant inductive proximity switch 24-1884-2292 63
6.5.5 PSG2-ATEX with pressure-resistant inductive proximity switch 24-1884-2613 64
6.5.6 PSG2-ATEX with 2/2 directional solenoid valve 24-1884-2292 65
6.6 Assembly PSG3-ATEX 66
6.6.1 Basic design PSG3 66
6.6.2 PSG3 tightening torques 67
6.6.3 PSG3-ATEX with visual cycle indicator (ZY) 68
6.6.4 PSG3 with cycle indicator, housing, and inductive proximity switch 24-1884-2292 69

6.7 Installing a PSG modular metering device 70
6.8 Consolidation of outlets 71
6.9 Changing a PSG module 72
6.10 Connecting the lubricant lines 73
6.10.1 Installing the lubrication piping 74
6.11 Attachment of bridges (crossporting) 75
6.12 Establishing equipotential bonding 78
6.13 Electrical connection 79
6.13.1 Inductive proximity switch 24-1884-2288 79
6.13.2 Inductive proximity switch 24-1884-2292 79
6.13.3 Inductive proximity switch 24-1884-2613 80
6.13.4 Connecting directional solenoid valve 24-1254-2212 80

7. First start-up 81
7.1 Venting a grease progressive system 81
7.2 Venting an oil progressive system 82
7.3 Checklist for first start-up 82
7.4 Inspections before first start-up 83
7.5 Inspections during first start-up 83

8. Operation 84

9. Cleaning 85
9.1 Cleaning agents 85
9.2 Exterior cleaning 85
9.3 Interior cleaning 85

10. Maintenance 86

11. Malfunctions, causes, and remedies 87
11.1 Prior to beginning troubleshooting 87
11.2 Metering device and system malfunctions 88

12. Repairs 91
12.1 General notes 91
12.2 Replace inductive proximity switch 92

13. Shutdown, disposal 93
13.1 Temporary shutdown 93
13.2 Permanent shutdown, disassembly 93
13.3 Disposal 93

14. Spare parts 94

15. Accessories 100

16. Declarations of Conformity 102
16.1 Inductive proximity switch 24-1884-2288 102
16.2 Inductive proximity switch 24-1884-2292 ..... **103**
16.3 Inductive proximity switch 24-1884-2613 ..... **104**
16.4 Directional solenoid valve 24-1254-2212 ..... **105**

Explanation of symbols and signs

	General warning		Risk of electrical shock		Risk of slipping		Hot surfaces
	Being drawn into machinery		Crushing hazard		Pressure injection		Suspended load
	Electrostatic sensitive components		Potentially explosive atmosphere		Reserve		Reserve
	Wear personal protective gear (goggles)		Wear personal protective gear (face mask)		Wear personal protective gear (gloves)		Wear personal protective gear (protective clothing)
	Wear personal protective gear (protective footwear)		Unlock the product		General notes		Unauthorized persons must be kept away
	CE marking		Disposal of waste electrical and electronic equipment		Disposal, recycling		PE conductor PE conductor

	Warning level	Consequence	Probability
	DANGER	Death, serious injury	Immediate
	WARNING	Death, serious injury	Possible
	CAUTION	Minor injury	Possible
	IMPORTANT NOTE	Property damage	Possible

Symbol	Meaning
●	Chronological instructions
○	Bullet list items
☞	Indicates the requirements that must be met for the actions described in the following

Abbreviations and conversion factors

re:	regarding	°C	degrees Celsius	°F	degrees Fahrenheit
approx.	approximately	K	Kelvin	Oz.	ounce
i.e.	that is	N	Newton	fl. oz.	Fluid ounce
etc.	et cetera	h	hour	in.	inch
poss.	possibly	s	second	psi	pound per square inch
if necessary	if necessary	d	day	sq.in.	square inch
usually	usually	Nm	Newton meter	cu. in.	cubic inch
incl.	including	ml	milliliter	mph	miles per hour
min.	minimum	ml/d	milliliters per day	RPM	revolutions per minute
max.	maximum	ccm	cubic centimeter	gal.	gallon
Min.	minute	mm	millimeter	lb.	pound
etc.	et cetera	l	liter	hp	horsepower
e.g.	for example	db (A)	sound pressure level	kp	kilopound
kW	kilowatt	>	greater than	fpsec	feet per second
U	voltage	<	less than	Conversion factors	
R	Resistance	±	plus minus	Length	1 mm = 0.03937 in.
I	current intensity	Ø	diameter	Area	1 cm^2 = 0.155 sq.in.
V	volt	kg	kilogram	Volume	1 ml = 0.0352 fl.oz.
W	watt	RH	relative humidity		1 l = 2.11416 pints (US)
AC	alternating current	≈	approximately	Ground	1 kg = 2.205 lbs
DC	direct current	=	equal to		1 g = 0.03527 oz.
A	ampere	%	percent	Density	1 kg/cm^3 = 8.3454 lb./gal(US)
Ah	ampere hour	‰	per mil (thousandth)		1 kg/cm^3 = 0.03613 lb./cu.in.
Hz	Frequency (Hertz)	≥	greater or equal	Force	1 N = 0.10197 kp
NC	normally closed contact	≤	less or equal	Pressure	1 bar = 14.5 psi
NO	Make-contact (normally open)	mm^2	square millimeter	Temperature	°C = (°F-32) x 5/9
		rpm	Revolutions per minute	Power	1 kW = 1.34109 hp
				Acceleration	1 m/s^2 = 3.28084 $ft./s^2$
				Speed	1 m/s = 3.28084 fpsec.
					1 m/s = 2.23694 mph

1. Safety instructions

1.1 General safety instructions

- The operator must ensure that the instructions are read by all persons tasked with working on the product or who supervise or instruct such persons. The operator must also ensure that the staff fully understands the content of the instructions. Putting the products into operation or operating them without having read the instructions is prohibited.
- Retain the instructions for further use.
- The products described here were manufactured in accordance with current state-of-the-art technology. Risks may, however, arise from non-compliant usage and may result in personal injury or damage to material assets.
- Any malfunctions which may affect safety must be remedied immediately. In addition to these instructions, the statutory regulations for accident prevention and environmental protection must be observed.

1.2 General behavior when handling the product

- The product may only be used in awareness of the potential dangers, in proper technical condition, and according to the information in this manual.
- Familiarize yourself with the functions and operation of the product. The specified assembly and operating steps and their sequences must be observed.
- Any unclear points regarding proper condition or correct assembly/operation must be clarified. Operation is prohibited until issues have been clarified.
- Unauthorized persons must be kept away.
- Wear personal protective equipment.
- All safety regulations and in-house instructions relevant to the particular activity must be observed.
- Never use any part of the centralized lubrication system as a stand or step or for climbing.
- Responsibilities for different activities must be clearly defined and observed. Uncertainty seriously endangers safety.
- Guards and safety devices must not be removed, modified, nor disabled during operation and must be checked for proper function and completeness at regular intervals.
- If protective and safety mechanisms must be removed, they must be reinstalled immediately following conclusion of work and then inspected for proper function.

- Any malfunctions that occur must be resolved according to responsibility. The supervisor must be notified immediately in case of malfunctions outside one's individual scope of responsibility.

1.3 Intended use

Feed lubricants only in compliance with the specifications, technical data, and limits presented in this manual. Usage is permitted exclusively in the context of commercial or business activity by professional users.
Modular metering devices (progressive metering devices) of the series PSG are designed for positively driven distribution of lubricants (oils/greases) in centralized lubrication systems.
The maximum inlet volumetric flow of the progressive metering devices in the series is as follows:
PSG1 0.8 l/min
PSG2 2.5 l/min
PSG3 6.0 l/min.
The maximum permissible operating pressure is 200 bar in all three basic designs. This may be lower if attachments are connected. Consult and comply with the relevant data from Chapter 4, "Technical data."
The inlet and outlet fittings and their connecting lines must be designed for these parameters.

The technical requirements for the installation of the modular metering devices are set out in Chapter 6, "Assembly." These requirements must be complied with. The same applies to the Technical data, Chapter 4.
Only ATEX attachments and monitoring equipment approved by SKF for the PSG1, PSG2 and PSG3 series metering devices may be installed.

1.4 Modifications to the product

Unauthorized modifications and changes can have an unpredictable effect on safety. Unauthorized modifications and changes are therefore prohibited.

1.5 Foreseeable misuse

Any usage of the product other than as specified in this manual is strictly prohibited. Particularly prohibited are:

- Use outside the specified ambient temperature range
- Use of non-specified equipment
- Use of dirty lubricants or lubricants with air inclusions.
- Use of C3 versions in areas with aggressive, corrosive substances (e.g., high salt load)
- Use of plastic parts in areas with high ozone load or in areas with damaging radiation (e.g., ionizing radiation)
- Use to feed, forward, or store hazardous substances and mixtures as defined in Annex I Part 2-5 of the CLP Regulation (EC 1272/2008) or HCS 29 CFR 1910.1200 that are marked with hazard pictograms GHS01-GHS06 and GHS08
- Use to feed / forward / store gases, liquefied gases, dissolved gases, vapors, or fluids whose vapor pressure exceeds normal atmospheric pressure of 1013 mbar [14.69 psi] by more than 0.5 bar [7.25 psi] at their maximum permissible operating temperature
- Use in another, more critical explosion protection zone than specified on the type plate.
- Use with improperly performed subsequent finish. The finish or paint coat must meet the requirements of the standards applicable to ATEX.
- Use to feed, forward, or store lubricants containing volatile solvents.
- Use in potentially explosive gases and vapors whose ignition temperature is less than 125% of the maximum surface temperature.
- Use in potentially explosive dusts whose minimum ignition temperature and glow temperature are less than 150% of the maximum surface temperature.
- Use of lubricants with temperatures above the maximum permissible ambient temperature.

1.6 Prohibition of certain activities

The following activities must be performed only by employees of the manufacturer or persons authorized by the manufacturer due to possibly undetectable sources of error or due to statutory requirements:

- Replacement of or modifications to the pistons of the modules

1.7 Painting plastic components

The painting of all plastic components and seals of the products described here is prohibited. Completely mask or remove plastic components before painting the main machine.

1.8 Inspections prior to delivery

The following tests were performed prior to delivery:

- Safety and functional tests
- For electrically operated products: Electrical tests according to DIN EN 60204-1, VDE 0113-1
- Inspections pursuant to the requirements of the ATEX Directive

1.9 Referenced documents

In addition to this manual, the following documents must be observed by the respective target group:

- Operational instructions, approval rules
- The safety data sheet of the lubricant used

If applicable:

- Project planning documents
- Instructions from suppliers of purchased parts
- Instructions for other components for setting up the centralized lubrication system
- Other relevant documents for integration of the product into the main machine, system
- The explosion protection document of the operator

1.10 Markings on the product

Equipotential bonding connections
on the product

In accordance with the results of the workstation risk assessment, additional labels (e.g., warnings, safety signs, prohibition signs or labels in accordance with CLP/GHS) are to be attached by the operator if necessary.

1.11 Notes on the type plate

The rating plate provides important data such as the type designation, order number, etc.
To avoid loss of this data in case the type plate becomes illegible, these characteristics should be entered in the manual.

Material number: **24-38_____ATEX**
CE EX _____
CE EX _____
Series No._____

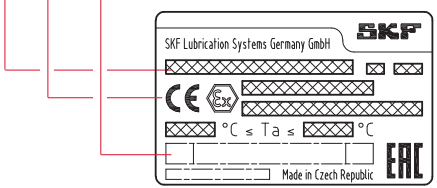

1.12 Note on CE marking

The CE marking is based on the requirements of the applied Directives:

- ATEX 2014/34 EU
- 2014/30/EU
  Electromagnetic Compatibility
- 2011/65/EU
  (RoHS II) Directive on the restriction of the use of certain hazardous substances in electrical and electronic equipment

Note on Low-Voltage Directive 2014/35/EU

The protection objectives of the Low Voltage Directive 2014/35/EU are met in accordance with Annex II, No. 1.2.7 of the ATEX Directive 2014/34/EU

Note on Pressure Equipment Directive 2014/68/EU

Due to its performance characteristics, the product does not reach the limit values defined in Article 4, Paragraph 1, Subparagraph (a) (ii) and is excluded from the scope of Pressure Equipment Directive 2014/68/EU in accordance with Article 1, Paragraph 2 Subparagraph (f).

1.13 Explosion protection marking in accordance with Directive 2014/34/EU

The ignition hazard analysis conducted in accordance with EN 80079-36 / -37 found that the progressive metering devices without electrical attachments described in these instructions do not constitute own potential sources of ignition. They consequently do not fall under the scope of Directive 2014/34/EU and thus do not bear explosion protection marking. The combination of the metering devices described here with the explosion-proof electrical components specified in this manual does not create an additional source of ignition. The explosion protecting marking on these metering devices is based solely on the attached explosion-proof electrical component.

1.14 Persons authorized to use the product

1.14.1 Operator

A person competent due to training, knowledge, and experience to execute the functions and activities associated with normal operation. This also includes the avoidance of possible hazards that may arise during operation.

1.14.2 Qualified mechanic

A person with appropriate technical training, knowledge, and experience who can recognize and avoid the hazards that may occur during transport, assembly, first start-up, operation, maintenance, repair, and dismantling.

1.14.3 Qualified electrician

A person with appropriate technical training, knowledge, and experience who can recognize and avoid hazards that may result from electricity.

1.14.4 Specialist in maintenance and servicing in potentially explosive atmospheres

This is a person competent due to qualified technical education, training, and experience to recognize risks and possible hazards when working on the device or subcomponents in potentially explosive atmospheres and to rectify these by taking suitable actions. The specialist has knowledge of the various types of protection, installation procedures, and explosive atmosphere classifications. The specialist is familiar with the rules and requirements relevant to their activity and to explosion protection, especially ATEX Directives 2014/34/EU and 1999/92/EC.

1.15 Instruction of outside fitters

Before commencing work, the operator must inform outside fitters of the operational safety regulations, applicable accident prevention regulations, and the functions of the main machine and its protective devices.

1.16 Provision of personal protective gear

The operator must provide personal protective gear appropriate for the location and intended application. This also includes ESD clothing and ESD tools for work in a potentially explosive atmosphere.

1.17 Operation

The following must be observed during first start-up and operation:

All information within this manual and all information within the referenced documents

All laws and regulations that the operator must observe

1.18 Emergency shutdown

Shut down the product in an emergency by:

- Switching off the main machine in which the product is integrated
- If necessary, pressing the on/off switch on the main machine

1.19 Transport, assembly, maintenance, malfunction, repair, shutdown, disposal

- Prior to the start of this work, all relevant persons must be notified of it. Precautionary operational measures, work instructions must be observed.
- Transport only with suitable transport and lifting gear on suitable paths.
- Maintenance and repair work can be subject to restrictions at low or high temperatures (e.g., altered flow properties of the lubricant). Maintenance and repair work should therefore preferably be performed at room temperature.
- Prior to performing work, the product and the machine in which the product will be integrated must be de-energized, depressurized, and secured against unauthorized activation.
- Take appropriate measures to ensure that moving, detached parts are immobilized during the work and that no limbs can be pinched by unintended movements.
- Assemble the product only outside the operating range of moving parts, at an adequate distance from sources of heat or cold. Other units of the machine, the vehicle must not be damaged or impaired in their function by the installation.
- Dry any wet, slippery surfaces or cover appropriately.
- Cover hot or cold surfaces appropriately.
- Work on electrical components may be performed only by qualified electricians. Note possible waiting times for discharge. Work on electrical components may be performed only in a voltage-free state and using tools suitable for electrical work.
- Establish the electrical connection only in accordance with the valid circuit diagram and in observance of the relevant regulations and the local electrical operating conditions.
- Do not touch cables or electrical components with wet or moist hands.
- Fuses must not be bridged. Always replace defective fuses with fuses of the same type.
- Ensure proper grounding of the product.
- Drill required holes only on non-critical, non-load-bearing parts. Use existing boreholes. Do not damage lines or cables when drilling.
- Observe any possible wearing spots. Protect components appropriately.

- All components used must be designed for:
  - The maximum operating pressure
  - The maximum/minimum ambient temperature
  - The lubricant to be delivered
  - The required ATEX zone
  - The operating/ambient conditions at the place of use.
- No parts may be subjected to torsion, shearing, or bending.
- Check parts for contamination before use and clean if necessary.
- Lubrication lines should be filled with lubricant prior to assembly. This simplifies subsequent bleeding of the system.
- Adhere to the specified torques. Use a calibrated torque wrench when tightening.
- Use suitable hoisting equipment when working with heavy parts.
- Avoid mixing up or incorrectly assembling disassembled parts. Label parts.

1.20 First start-up, daily start-up

Ensure that:

- All safety mechanisms are fully present and functional
- All connections are properly connected
- All parts are correctly installed
- All warning labels on the product are fully present, visible, and undamaged
- Illegible or missing warning labels are immediately replaced

1.21 Cleaning

- There is a fire hazard from the use of flammable cleaning agents. Use only non-flammable cleaning agents that are suitable for the intended purpose.
- Do not use corrosive cleaning agents.
- Do not use steam-jet equipment or high-pressure cleaners. This may damage electrical components.
  Observe the IP enclosure rating.
- Cleaning work must not be performed on conducting components.
- Mark wet areas accordingly.

1.22 Special safety instructions regarding explosion protection

- Always behave so as to avoid explosion hazards.
- A written work authorization from the operator is required prior to initiating work in potentially explosive atmospheres. Unauthorized persons must be kept away.
- There must be no evidence that parts of the explosion protection are missing or non-functional. If this is not excluded, switch off the machine and immediately notify the supervisor.
- Explosion protection measures must never be deactivated, changed, or bypassed.
- The introduction of ignition sources such as sparks, open flames, and hot surfaces into potentially explosive atmospheres is prohibited.
- Depending on the operating conditions, check the product for damage that may present a risk of ignition and check for proper function. An inspection must be conducted at least every 12 months.
- The lubricant's ignition temperature has to be at least 50 kelvin above the max. permissible surface temperature.
- The ignition temperature of the surrounding potentially explosive gases and vapors must be greater than 125% of the maximum surface temperature.
- The minimum ignition temperature and the glow temperature and the surrounding potentially explosive dusts must be greater than 150% of the maximum surface temperature.
- The usage limits for explosion protection are clearly defined in the explosion protection marking by the device categories,

gas and dust groups and temperature classes. Light metal dusts, as a potentially explosive ambient medium, are always prohibited even when dust group IIIc is specified.

- Use only tools and clothing approved for use in potentially explosive atmospheres (ESD).

- Transport/assembly/repairs and work on electrical components may be performed only if it is ensured that there is no explosive atmosphere present.

- Repairs or modifications to explosion-proof machinery may be performed only by the manufacturer or a workshop recognized by a notified body and accepted by the manufacturer. If the work is not performed by the manufacturer itself, the repair must be accepted and approved in writing by an inspector from a recognized validation organization. The repair is marked by a repair sign on the machine containing the following information:
  - Date
  - Executing company
  - Type of repair
  - If applicable, mark by expert

- Shipping damage may lead to the loss of explosion protection. If there is apparent shipping damage, do not install or put into operation the product.

- Shipping damage may lead to the loss of explosion protection. If there is apparent shipping damage, do not install or put into operation the product.

- The product may be cleaned only if there is no potentially explosive atmosphere.

- All parts of the grounding concept must be properly present and connected with the main machine.

- Handle materials in such a way that no sparks may arise from tilting, dropping, slipping, rubbing, or striking. If necessary, cover materials by appropriate means.

- Never disconnect any plug-in connections under electrical voltage. Secure plug-in connections against disconnection by hand using the locking clips provided

- The operator must critically examine whether operation without an empty signal results in a new hazard potential (e.g., due to heating of bearings on the machine in the range of the ignition temperature). If this cannot be reliably excluded, an empty signal must be provided or appropriate organizational measures taken to monitor the temperature of the bearings.

- Avoid / immediately remove any accumulated dust. Accumulated dust has a thermal insulating effect and promotes the formation of a potentially explosive atmosphere when agitated/swirled.

- The product must be integrated into the operator's lightning protection scheme.
- All parts must be inspected for corrosion on a regular basis. Replace affected parts
- Junction boxes must be securely closed and the cable glands properly sealed.
- Any additional electrical monitoring equipment must be securely connected and correctly configured.
- When assembling the metering devices at the place of use, equipotential bonding must be ensured by sufficiently large, conductive metal contact with the attachments and with the main machine.

1.23 Nullification of ATEX approval

The ATEX approval is nullified by:

- Improper usage
- Unauthorized alterations
- Use of non-original SKF spare/replacement components
- Failure to comply with this manual and referenced documents
- Use of non-specified equipment
- Failure to observe the prescribed repair and maintenance intervals
- Operation with a damaged, missing, or improperly performed subsequent finish that does not meet the requirements of the standards applicable to ATEX.

1.24 Operation in potentially explosive atmospheres

Operation is only permitted in compliance with:

- All information within this manual and the information within the referenced documents
- All laws and regulations that the operator must observe
- The information on explosion protection according to Directive 1999/92/EC (ATEX 137)
- The ATEX approval

1.25 Explosion protection marking

The explosion protection marking is located on the Declaration of Conformity and on the rating plate.

1.26 Obligations of the operator

1.26.1 Identification of hazards

The operator must identify all hazards resulting from integration into the main machine as well as the hazards at the machine's place of installation. The operator must take necessary measures for safety and health protection.

1.26.2 Explosion protection measures

Based on a comprehensive assessment of the work area, the operator ensures that the equipment and all installation materials are suitable for operation in potentially explosive atmospheres and are assembled, installed, and operated in such a way that they do not cause an explosion.

If modifications, extensions, and/or conversions are performed in potentially explosive atmospheres, the operator shall take the necessary measures to ensure that these modifications, extensions, or conversions fulfill the minimum explosion protection requirements.

The operator

- Documents the measures for explosion protection
- Marks the potentially explosive areas
- Prepares written operating instructions
- Selects suitable employees
- Provides the employees with adequate and appropriate instruction regarding explosion protection
- Employs a release system for hazardous activities and for those that may become dangerous in interaction with other work
- Performs required tests and monitoring
- Ensures that only original spare parts are used

1.26.3 Provision of necessary information

The operator must the relevant required instructions available to all persons assigned with operation, repair, and maintenance.

The operator must ensure that the persons in question have read and understood the required instructions.

The same applies to all relevant safety data sheets, operational instructions, accident protection regulations, and instructions from suppliers of purchased parts and consumables.

Depending on the operational organization, the relevant instructions may need to be made available to further persons and/or departments.

1.26.4 Duty to provide instruction and training

The operator clearly defines the responsibilities of the personnel for operation, installation, maintenance. Prior to the first use of the machine, the operator is obligated to instruct all persons authorized to use the machine on its proper handling in accordance with their respective field of activity and responsibility using practical exercises.

The instruction includes at least:

- Zone classification
- Scope and limits of the area of activity and responsibility for the respective group of people
- Safety-conscious behavior and behavior in an emergency
- Avoidance of hazards when handling the product and the main machine
- Meaning of warnings, warning labels
- Handling operating materials and cleaning agents
- If necessary, use and monitoring of personal protective gear

These instructions must be documented and repeated at regular intervals. New staff may operate the machine only under the supervision and instruction of experienced staff.

1.27 Residual risks

Residual risk	Possible in lifecycle	Avoidance / Remedy
Personal injury / property damage due to falling of hoisted parts	A, B, C, G, H, K	Unauthorized persons must be kept away; nobody is allowed to be present below hoisted parts. Lift parts using suitable and tested lifting gear.
Personal injury/property damage due to tilting or falling product due to non-compliance with specified torques	B, C, G	Adhere to the specified torques. Secure the product only to components with a sufficient load-carrying capacity. If no torques are specified, use those specified for the screw size for screws of strength class 8.8.
Personal injury / property damage due to electric shock resulting from power lead damage	B, C, D, E, F, G, H	Inspect power leads for damage prior to initial use and then at regular intervals. Do not install the cable on moving parts or wearing spots. If this cannot be avoided, use anti-kink coils and/or conduits.
Personal injury / property damage due to spilled, leaked lubricant	B, C, D, F, G, H, K	Be careful when filling the reservoir and then connecting or disconnecting the lubricant lines. Use only hydraulic screw unions and lubrication lines suitable for the specified pressure. Do not install lubrication lines on moving parts or wearing spots. If this cannot be avoided, use flexible hose lines or anti-kink coils and/or conduits.
Lifecycles: A = Transport, B = Assembly, C = First start-up, D = Operation, E = Cleaning, F = Maintenance, G = Malfunction, repair, H = Shutdown, K = Disposal		

1.28 Residual ATEX risks

Residual risk	Possible in lifecycle	Avoidance / Remedy
Use in a potentially explosive atmosphere without checking equipotential bonding for electrical continuity	C, D, G	Check the equipotential bonding for continuity before first start-up, after every repair, and additionally at regular intervals defined by the operator
Operation with a finish or paint coat that is damaged, missing, or improperly applied after delivery, and does not meet the requirements of the standards applicable to ATEX	C, D, E, F, G	Prior to first start-up and then at regular intervals, inspect the varnishing and if necessary have it replaced by a person competent to do so
Heating of non-supplied lubrication points to the ignition temperature range by an undetected malfunction within the centralized lubrication system	C, D, G	The operator must critically examine whether operation without corresponding detection options results in a new hazard potential (e.g., due to heating of non-supplied bearings on the machine to the range of the ignition temperature); if this cannot be reliably excluded, take appropriate countermeasures
Heating of components to the ignition temperature range / formation of a potentially explosive atmosphere by agitated/swirled dust	C, D, E, F, G	Avoid accumulated dust / remove accumulated dust on a regular basis; select an installation location with the lowest possible dust level
Lifecycles: A = Transport, B = Assembly, C = First start-up, D = Operation, E = Cleaning, F = Maintenance, G = Malfunction, repair, H = Shutdown, K = Disposal		

Residual risk	Possible in lifecycle	Avoidance / Remedy
Generation of electrostatic charges or sparks by dropping of parts	C, D, E, F, G	Secure parts against falling. If necessary, cover parts to avoid sparking.
Introduction of catalytic, unstable, or pyrophoric substances into the potentially explosive atmosphere	C, D, E, F, G	Ensure that none of these substances enter the potentially explosive atmosphere; have all substances approved by the operator in advance
Use of isolating amplifiers, for example to operate a capacity sensor in the potentially explosive atmosphere	C, D, G	Install isolating amplifiers only outside of the potentially explosive atmosphere
Incorrect mounting position. Loss of proper fill level reporting function	C, D, G	Follow the prescribed mounting position (± 5°). Correct the mounting position if necessary
Use of an unsuitable lubricant for low temperatures; at low temperatures, excessive lubricant viscosity can cause loss of pump function	C, D	Use only lubricants suitable for the specific operating temperature in each case
Lifecycles: A = Transport, B = Assembly, C = First start-up, D = Operation, E = Cleaning, F = Maintenance, G = Malfunction, repair, H = Shutdown, K = Disposal		

2. Lubricants

2.1 General information

Lubricants are used specially for specific applications. To fulfill the task, lubricants must meet various requirements to varying degrees. The most important requirements for lubricants are:

- Reduction in friction and wear
- Corrosion protection
- Noise reduction
- Protection against contamination/ ingress of foreign matter
- Cooling (primarily for oils)
- Durability (physical/chemical stability)
- Economic and environmental aspects

2.2 Selection of lubricants

SKF Lubrication Systems considers lubricants to be an element of system design. The selection of a suitable lubricant should reasonably be made during the design of the machine and forms the basis for planning the centralized lubrication system.

The manufacturer/operator of the machine should preferably make the selection with the supplier of the lubricant on the basis of the requirements profile of the specific task.

If you have no or little experience selecting lubricants for centralized lubrication systems, please contact SKF.

We gladly assist our customers in the selection of suitable components for supplying the selected lubricant and in the planning and design of a centralized lubrication system.

This will spare you potentially costly downtime due to damage to the machine/system and/or damage to the centralized lubrication system.

2.3 Material compatibility

The lubricants must generally be compatible with the following materials:

- Steel, gray cast iron, brass, copper, aluminum
- NBR, FKM (FPM), ABS, PA, PU

2.4 Temperature properties

The lubricant used must be suitable for the specific ambient temperature of the product. The viscosity required for proper function-

ing of the product must be maintained and must not be exceeded at low temperatures or fall too low at low temperatures. See the "Technical data" chapter for the required viscosities.

2.5 Aging of lubricants

In case of extended machine downtime, check before re-commissioning that the lubricant is still suitable for use in terms of chemical or physical signs of aging. We recommend performing this inspection after 1 week of machine downtime.

In case of doubt regarding the further suitability of the lubricant, replace it before putting back into operation and, if necessary, perform an initial lubrication manually.

It is possible for lubricants to be tested in the company's laboratory for their pumpability in centralized lubrication systems (e.g., "bleeding").

Please contact SKF if you have further questions regarding lubricants.

An overview of the lubricants we have tested is available on request.

Only lubricants specified for the product may be used (see "Technical data" chapter). Unsuitable lubricants can lead to failure of the product.

Do not mix lubricants. This can have unpredictable effects on the usability and this function of the centralized lubrication system.

Observe the relevant safety data sheets and identifications of hazards on the packaging when handling lubricants.

Due to the large number of possible additives, individual lubricants that meet the required specifications according to the manufacturer's data sheet are under some circumstances not suitable for use in centralized lubrication systems (e.g., incompatibility between synthetic lubricants and materials). To avoid this, always use lubricants that have been tested by SKF.

2.5.1 Solid lubricants



Solid lubricants may only be used after prior consultation with SKF Lubrications Systems.

Regarding the different solid lubricants in chisel pastes, observe the following:

Graphite
Max. graphite content 8%
Max. grit size 25 µm
(preferably in lamellar form)

MoS_2
Max. MoS_2 content 5%
Max. grit size 15 µm

Copper
Chisel pastes containing copper are known to lead to coatings forming on pistons, bore holes, and mating surfaces. This can result in blockages in the centralized lubrication system.

Calcium carbonate
Chisel pastes containing calcium carbonate are known to lead to very heavy wear on pistons, bore holes, and mating surfaces.

Calcium hydroxide
Chisel pastes containing calcium hydroxide are known to harden considerably over time, which can lead to failure of the centralized lubrication system.

PTFE, zinc, and aluminum
It is not yet possible to define any limit values for these solid lubricants on the basis of existing knowledge and practical experience.

3. Overview, functional description

3.1 Overview of progressive metering devices

Fig. 1 **Type and size**

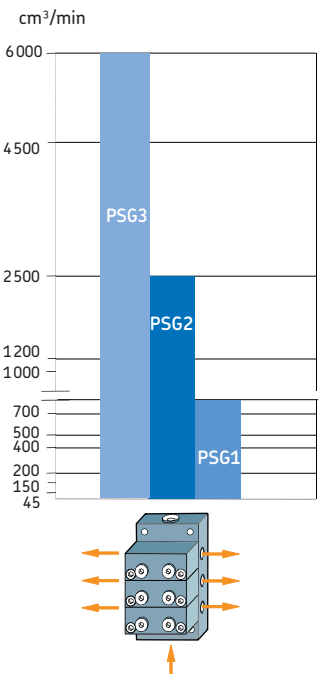

General

Modular metering devices (progressive metering devices) of the series PSG are designed for positively driven distribution of lubricants (oils/greases) in centralized lubrication systems.

The inlet and all outlets of the metering devices are located in the baseplate. The functional modules are attached to the baseplate and can be replaced without loosening the tubing.

The volumetric flow fed via **a** tube is forcibly distributed in a predetermined ratio to the outlets, i.e. to the lubrication points or downstream progressive metering devices. Pistons aligned in series meter the lubricant for two opposite outlets each and control the function of the neighboring piston. This way, the function of the modular metering device can be checked by monitoring **any** piston with a cycle indicator or proximity switch.

3.2 ATEX marking according to Directive 2014/34/EU (ATEX)

The ignition hazard analysis conducted in accordance with EN 80079-36 / -37 found that SKF basic metering devices of series PSG1, PSG2 and PSG3 without electrical attachments do not constitute own potential sources of ignition. They consequently do not fall under the scope of Directive 2014/34/EU and thus do not bear explosion protection marking. To better incorporate the basic metering devices into the operator's explosion protection concept, these metering devices have also been equipped with an equipotential bonding terminal and added to this manual as ATEX metering devices.

The combination of the metering devices described here with the explosion-proof electrical components specified in this manual does not create an additional source of ignition. The explosion protecting marking on these metering devices is based solely on the attached explosion-proof electrical component(s).

3.3 Information on volume data

☞ See Figure 2

In centralized lubrication systems, the nominal volume is indicated per stroke. This is calculated from the piston diameter and the maximum possible stroke of the particular metering piston, the maximum stroke. The maximum achievable piston capacity is typically used as the nominal volume when configuring a progressive metering device,

though the movement of the piston is influenced by various factors such as:

- Differences in back pressures at the outlets, for example due to long tubing lengths or connected roller bearings or shaft bearings
- Stroke frequency (dynamics)
- Working temperature, viscosity fluctuations due to strong temperature changes

The maximum stroke and thus the piston capacity/metered quantity can reduce due to these factors.
The minimum piston stroke, also referred to as the compulsory stroke, is determined by the position of the control bores in the metering device and the control edges on the metering piston. If only the compulsory stroke is performed, the metered quantity at the affected outlet is reduced, which also increasing the effective number of piston strokes. The theoretically determined number of piston strokes can therefore deviate from the actual measured value.

The ratio of piston capacity per metering device outlet determines the distribution ratio of the quantity of lubricant supplied to the metering device. This distribution ratio is usually constant under all operating conditions.
Figure 2 shows the piston positions of a metering device section at maximum stroke and at compulsory stroke (minimum stroke).

Fig. 2 **Maximum stroke and compulsory stroke**

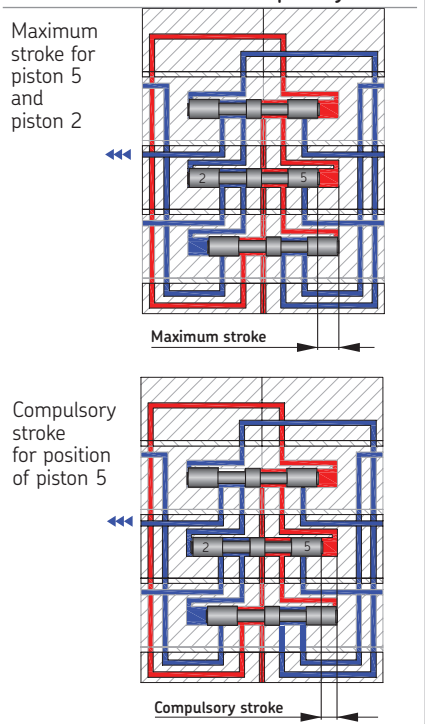

3.4 Functioning of a PSG progressive metering device

☞ See Figure 3

Observation of the movements beginning with the moment that all three pistons (**A**, **B**, **C**) on the left end stop shows that the lubricant and operating pressure reach from the inlet through the through-duct to the pistons **C**-right, **B**-right and **A**-left; that is, while pistons **C** and **B** retain their positions, the **A** piston is pushed right. The lubricant volume specified by the piston diameter and stroke is pressed into a duct on whose end (outlet 4) the same quantity exits. This stroke movement of piston **A** closes or opens multiple control ducts. Control duct 2, through which the lubricant reaches piston **B**-left and shifts it right, is now open. The corresponding metering volume is pressed into the outlet duct and exits at outlet 2.
The stroke movement of piston B has now closed or opened control ducts. Control duct 3 is now open. The lubricant pressure moves piston **C** to the right, pushing the corresponding metering volume into the duct to outlet 3. This movement of piston **C** opens, among others, the reversing duct that reconnects the through-duct with piston **A**-right.
Analogous to the piston movement just described, pistons **A**, **B**, and **C** now move consecutively back to the left.

Fig. 3 **PSG sectional view**

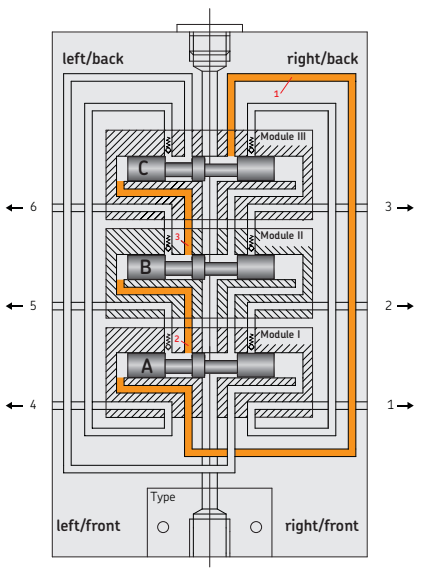

3.5 Information on the design of a PSG progressive metering device

The general criteria for the design of progressive metering devices also apply without restrictions to the PSG modular metering devices. The stroke rate is the most important criterion.
It should be kept as low as possible by selecting high-volume modules (recommended value for metering device stroke rate ≤ 200 rpm). Pressure losses and noise levels are thus reduced.
For the purpose of self-venting, the smallest stroke module should not be placed in the first position (as viewed from the inlet).
In case of an installation on movable machine parts or in case of strong vibrations (e.g. on pressing machines), the piston position of the metering device**must not** correspond with the direction of movement of the machine part.
The volumetric flow of an outlet can be doubled by internal consolidation of two opposite outlets. To do this, the setscrew in the baseplate (the right input as seen from the metering device inlet) must be unscrewed.
The outlet in the baseplate that is no longer needed is to be closed using a washer and a plug screw; see Chapter 6.9.
Adjacent outlets can be consolidated using external bridges (crossporting). One bridge can consolidate either two or three outlets.
It is still possible to use bridges with (a) check valve(s) - see Chapter 6.12.
Dummy and functional modules can be varied as desired within the frame size. A minimum of three functional modules per metering device is required.
If dummy modules are installed, the two lubricant outlets under the dummy module must be closed in the baseplate.
Increased pressure loss must be expected if two dummy modules are installed side-by-side or if dummy modules are used as the start or end modules.
If the piston movement is recorded using a cycle indicator (**ZY**) or a proximity switch (**ZS**), the modules intended for this purpose are to be used. The attachment should not take place at the smallest module (PSG1=50 mm^3/stroke, PSG2 =60 mm^3/stroke, PSG3 =800 mm^3/stroke).
For PSG1 modular metering devices, recommend outlet port screws with check valves.

3.6 Dummy module

Dummy and functional modules can be varied as desired within the frame size. A minimum of three functional modules per metering device is required.
If dummy modules are installed, two lubricant outlets each must be closed in the baseplate (under the dummy module).
Increased pressure loss must be expected if two dummy modules are installed side-by-side or if dummy modules are used as the start or end modules.

3.7 Consolidation of outlets

☞ See Figure 4

The volumetric flow of an outlet can be doubled by internal consolidation of two opposite outlets. To do this, the threaded pin **G** in the baseplate -- the right input as seen from the metering device inlet -- must be screwed out. The outlet in the baseplate that is no longer needed is to be closed using a washer **D** and a plug screw **V**. Adjacent outlets can be consolidated using external bridges (crossporting). A bridge can consolidate up to three outlets with the PSG1 and up to four outlets with the PSG2 and PSG3. Bridges exist with or without outlets and also with or without check valves.
For PSG1 modular metering devices, we recommend outlet port screws with check valve.

Fig. 4 **Consolidation of outlets**

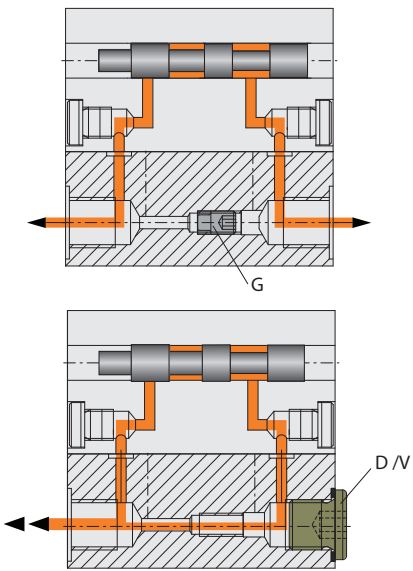

3.8 Overview of a general progressive system

Fig. 5 **Example of progressive system with pump unit**

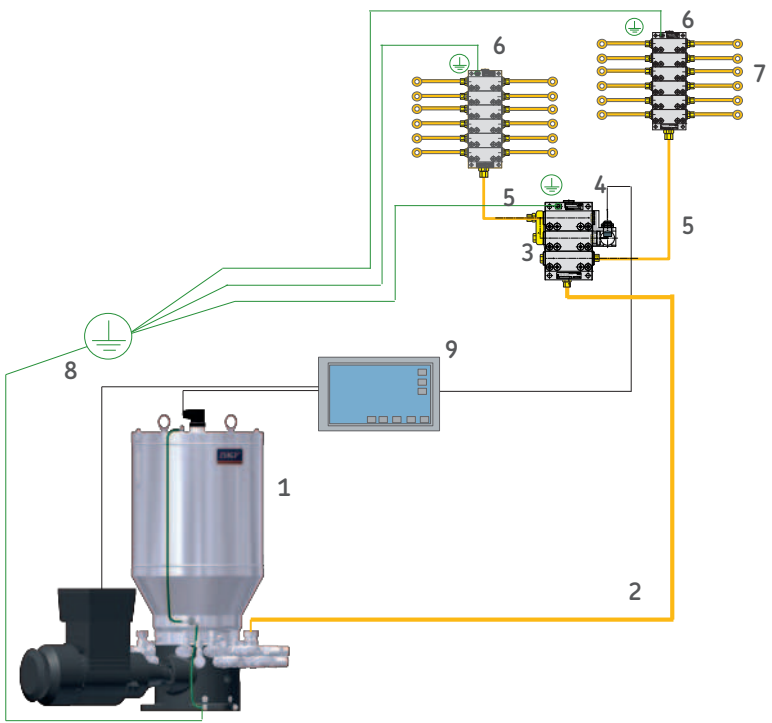

Legend to Fig. 5

Progressive system with function monitoring	
1	Pump unit with:
	Pressure regulating valve
	- Fill level control
2	Main lubricant line
3	Main metering device
4	Function monitoring (inductive proximity switch)
5	Lubricant secondary feed lines
6	Secondary metering device
7	Feed lines
8	Equipotential bonding connection ⏚
9	Process control level

3.8.1 Functional description of a general progressive system

☞ See Figure 5

A general progressive metering device system consists of the following components:

- o Pump unit with pump element and pressure regulating valve
- o Possibly function monitoring (proximity switch)
- o Main lubricant line
- o Main and possible secondary metering device
- o Branch and lubricant lines

When the pump motor is turned on, the lubricant pump delivers lubricant from its lubricant reservoir to the lubricant outlet. The pump element attached to the outlet delivers the lubricant further, into the downstream main line. The lubricant flows through the main line to the progressive metering device. There, the lubricant is distributed according to the volume required by the lubrication point being supplied.
In progressive systems with a main metering device and secondary metering device, the lubricant coming from the pump unit is delivered to the main metering device. The main metering device distributes the lubricant to the secondary metering devices according to their individual volume requirements. From there, the lubricant flows to the lubrication points.

Depending on the pump design (with or without control unit), the following configuration, monitoring, and connections options are available:

- ○ Interval time and pump cycle time can be adjusted independently, including on monitored systems
- ○ Recording of remaining intervals and remaining lubrication times
- ○ Data backup in case of voltage failure
- ○ Non-volatile memory with PIN code protection
- ○ Connectivity of a proximity switch for monitoring the metering device function
- ○ Connectivity for an external fault indicator light
- ○ Connectivity for external fault pump operation monitoring
- ○ Connectivity for an external
- ○ pushbutton to trigger an intermediate lubrication
- ○ Internal fill level monitoring, lubrication cycle stop and fault notification remain on display in case the level falls below minimum
- ○ Fault memory.

3.9 Overview of PSG1 progressive metering device series

Fig. 6 **ATEX PSG1 progressive metering device series**

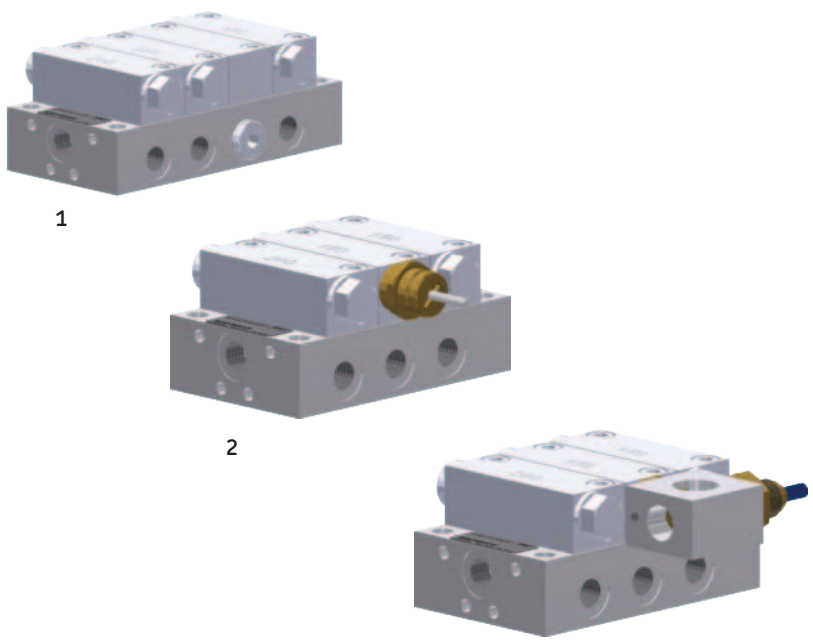

Legend to Fig. 6

1		PSG1 basic design for oil and grease, without attachments, without monitoring
2		PSG1 basic design with cycle indicator for oil or grease, monitoring type ZY (visual monitoring)
3	Ex	PSG1 with inductive proximity switch in accordance with NAMUR DIN EN 50227 for oil or grease, monitoring type ZS (electric monitoring)

3.10 Overview of PSG2 progressive metering device series

Fig. 7 **ATEX PSG2 progressive metering device series**

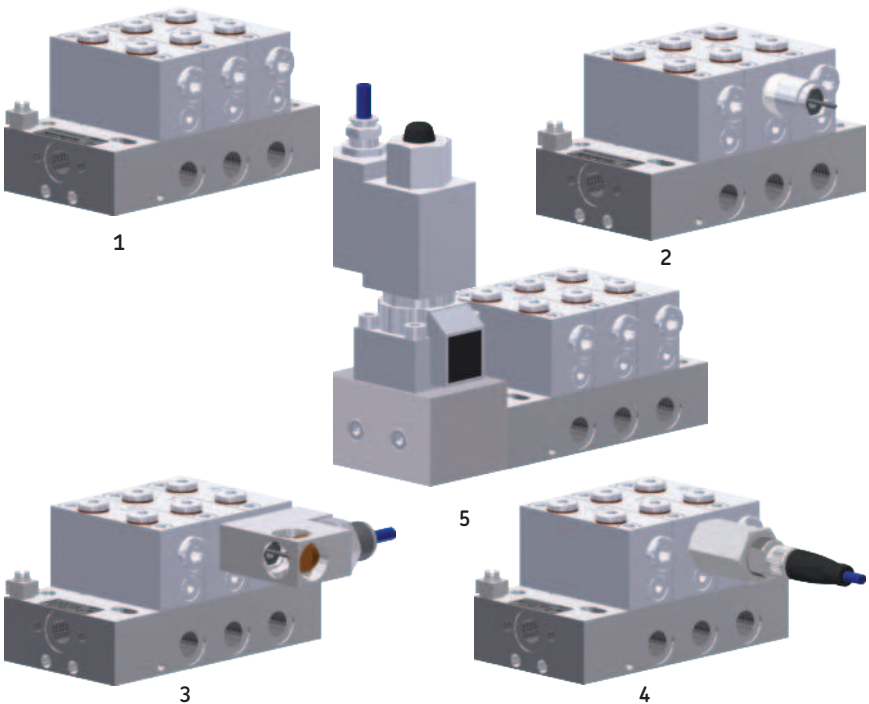

Legend to Fig. 7

1		PSG2 basic design for oil and grease, without attachments, without monitoring
2		PSG2 basic design with cycle indicator for oil or grease, monitoring type ZY (visual monitoring)
3	Ex	PSG2 with inductive proximity switch in accordance with NAMUR DIN EN 50227, for oil or grease, type of monitoring ZS (electric monitoring) Inductive proximity switch 24-1884-2292
4	Ex	PSG2 with inductive proximity switch in accordance with NAMUR DIN EN 50227, for oil or grease, type of monitoring ZS (electric monitoring) Inductive proximity switch 24-1884-2613
5	Ex	PSG2 with 2/2 directional solenoid valve for oil and grease, attachment 13

3.11 Overview of PSG3 progressive metering device series

Fig. 8 **ATEX PSG3 progressive metering device series**

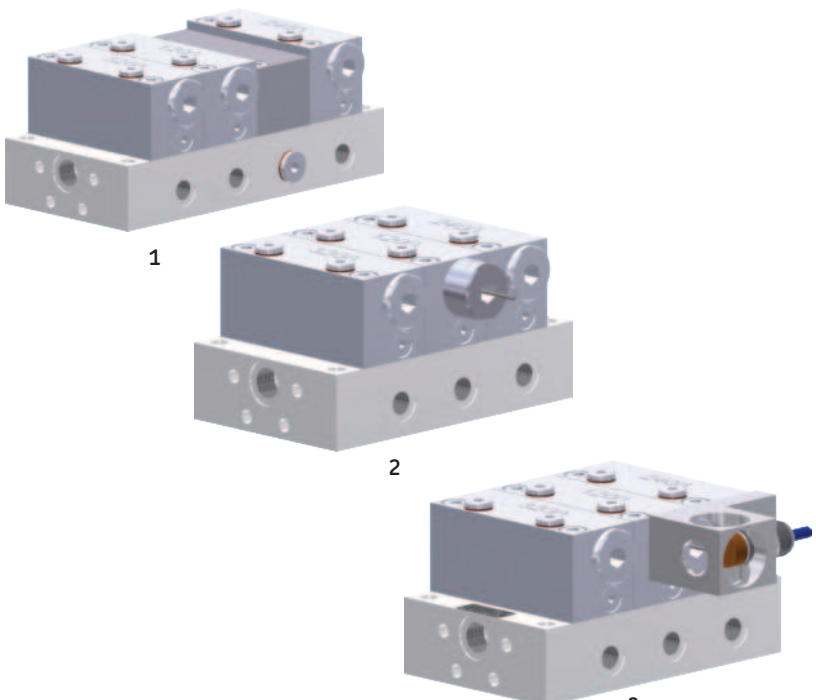

Legend to Fig. 8

1		PSG3 basic design for oil and grease, without attachments, without monitoring
2		PSG3 basic design with cycle indicator for oil or grease, monitoring type ZY (visual monitoring)
3	Ex	PSG3 with inductive proximity switch in accordance with NAMUR DIN EN 50227, for oil or grease, type of monitoring ZS (electric monitoring) Inductive proximity switch 24-1884-2292

4. Technical data

4.1 PSG1-ATEX General technical data

4.1.1 PSG1 - Basic metering device

Technical data PSG1, Table 1 (1/2)			
Type		hydraulically controlled	
Mounting position	any	In case of attachments on moving machine parts or in case of strong vibrations (e.g., on pressing machines), the piston position of the metering device must not match the direction of movement of the machine part.	
Ambient temperature range	Basic design	-20°C to +110°C	
	with cycle indicator	-20°C to +75°C	
	with proximity switch	-20 °C to +70 °C	
Base plate with maximum outlets of which used outlets		6, 8, 10, 12, 14, 16, 18, 20	
	without bridges	3 to 20	
	with bridges	1 to 19	
Material	Baseplate	Aluminum alloy	
	Modules	Free cutting steel, galvanized	
	Seals	FKM (FPM)	
Hydraulic system operating pressure	Basic design	Min. 5-15 bar	Max. 200 bar
	with cycle indicator		Max. 150 bar
	with proximity switch		Max.150 bar
Inlet volume flow		Up to 0.8 l/min	
Volume per outlet and cycle		50, 100, 150, 200, 250 mm^3	

Technical data PSG1, Table 1 (2/2)		
Piston stroke rate		max. 200/min
Dividing ratio of delivery volumes	1:1 to 1:10	Larger dividing ratios are possible when consolidated! (up to 1:10)
Required starting pressure with oil		Min. 2 bar
Pressure loss		See pressure-loss diagrams on the following page
Lubricant		Mineral oils, greases based on mineral oil, environmentally friendly and synthetic oils and greases
Operating viscosity		> 12 mm^2/s
Worked penetration		≥ 265 x 0.1 mm (up to NLGI Grade 2)
Weight	Cycle indicator	0.06 kg

4.1.2 PSG1 pressure-loss diagram

Fig. 9 **PSG1, Technical data, Pressure loss diagram**

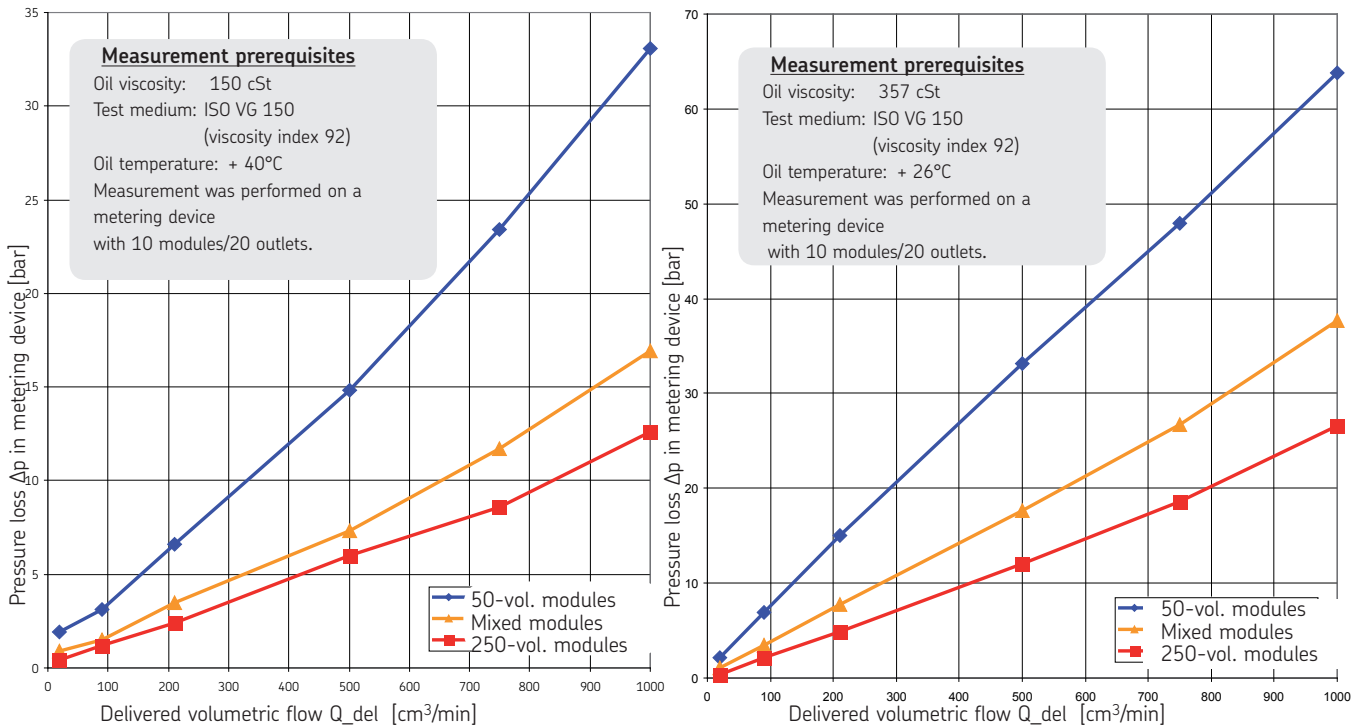

4.1.3 PSG1 with inductive proximity switch

PSG1 with inductive proximity switch, Table 2

PSG1 progressive metering device with inductive proximity switch	
For further technical data, see PSG1 basic design	
Inductive proximity switch	Order number: **24-1884-2288**
Connection to switching amplifier: Yes	
Internal thread	M12x1
Design	PVC, with 2 m cable, 2x 0.34 mm²
Nominal sensing distance	4 mm
Output function	Contact normally closed (NC)
Rated voltage	8.2 VDC (1kΩ)
System voltage	7.5 to 30 VDC (when used outside a potentially explosion environment)
Power consumption	< 1 mA blocking; conducting: > 2.1 mA
Switching frequency DC	1500 [Hz]
Electrical design	NAMUR DIN EN 50227
Internal capacitance	< 140 nF
Internal inductance	< 130 µH
Ambient temperature	-20°C ... +70°C
Housing material	Housing material brass, specially coated
Certification	PTB 01 ATEX 2191
Enclosure rating	IP67 EN60947-5-6
EX enclosure rating of the PSG1 metering device with inductive proximity switch	
Device labeling	II 1G IIC T6 Ga / -20...+70C°
	II 1D IIIC T90°C Da / -20...+70C°

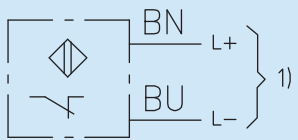

NC contact

1) Connection only via an approved NAMUR switching amplifier

IMPORTANT NOTE

Connection only to a certified intrinsically safe electrical circuits with maximum values:
U_i = 15 V
I_i = 50 mA
P_i =120 mW permitted.

Weight	
Proximity switch	0.04 kg
Bracket for proximity switch	0.01 kg

4.2 PSG2-ATEX General technical data

4.2.1 PSG2 - Basic metering device

Technical data PSG2, Table 3 (1/2)			
Type		hydraulically controlled	
Mounting position	any	In case of attachments on moving machine parts or in case of strong vibrations (e.g., on pressing machines), the piston position of the metering device must not match the direction of movement of the machine part.	
Ambient temperature range	Basic design	-20°C to +110°C	
	with cycle indicator	-20°C to +75°C	
	with proximity switch	-20°C to +70°C	
	2/2 directional solenoid valve	-20 to +40°C	
Base plate with maximum outlets of which used outlets		6, 8, 10, 12, 14, 16, 18, 20	
	without bridges	3 to 20	
	with bridges	1 to 19	
Material	Baseplate	Aluminum	
	Modules	Galvanized steel	
	Seals	FKM (FPM)	
Hydraulic system operating pressure	Basic design	Min. 5-15 bar	Max. 200 bar
	with cycle indicator		Max. 150 bar
	with proximity switch		Max. 150 bar
Inlet volume flow		Up to 2.5 l/min grease upon request	
Volume per outlet and cycle		60, 120, 240, 360, 480, 600, 720, 840 mm^3	

Technical data PSG2, Table 3 (2/2)				
Piston stroke rate		max. 200/min		
Dividing ratio of delivery volumes	1:1 to 1:28 AM	Larger dividing ratios are possible when consolidated!		
Pressure differential (with oil)	5 to 15 bar	Depending on volume index and viscosity or penetration and volumetric flow		
Starting pressure required with oil	Min. 2 bar			
Lubricant	Mineral oils, greases based on mineral oil, environmentally friendly and synthetic oils and greases			
	2/2 directional solenoid valve	Mineral oils, environmentally friendly and synthetic oils		
Operating viscosity		> 12 mm^2/s		
Worked penetration		≥ 265 x 0.1 mm (up to NLGI Grade 2)		
Weight	Cycle indicator	0.05 kg	Proximity switch	0.09 kg
	2/2 directional solenoid valve	1.94 kg	Bracket for proximity switch	0.01 kg

4.2.2 PSG2 with 2/2 directional solenoid valve

		PSG2 with directional solenoid valve, Table 4
2/2 directional solenoid valve	Order number: **24-1254-2212**	
Type	Seat valve, double-sided blocking	
Operating media	Oils ISO VG 10 to 68 greases NLGI grades 000 to 2	
How it works	De-energized closed (NC)	
Media temperature	Max. 70°C	
Ambient temperature	-20 to +40 °C	
Operating pressure	Max. 400 bar	
Volumetric flow	max. 15 l/min	
Rated voltage	24 V DC	
Rated output	23 W	
Rated current	0.83 A	
Enclosure rating	IP67	
ON-time	100% ON-time, until ambient temp. 35°C	
Connection type	10 m cable 3x 0.5 mm²	
EX enclosure rating of PSG2 metering device with 2/2 directional solenoid valve		
Device labeling	II 2G IIB T4 Gb / -20...+40C°	
	II 2D IIIC T135°C Db / -20...+40C°	

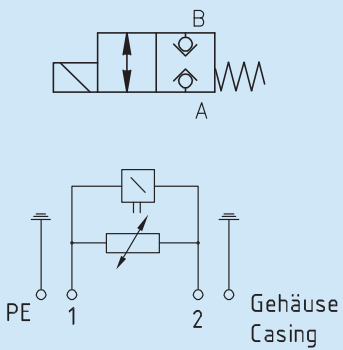

4.2.3 PSG2 with inductive proximity switch 24-1884-2292

PSG2 with inductive proximity switch, Table 5

PSG2 progressive metering device with inductive proximity switch	
For further technical data, see PSG1 basic design	
Inductive proximity switch	Order number: **24-1884-2292**
Connection to switching amplifier: Yes	
Internal thread	M18x1
Housing material	Bronze, white bronze-coated, active surface: PBT
Connection	PVC cable, 2 m long / 2x0.5 mm²
Nominal sensing distance	8 mm
Output function	Contact normally closed (NC)
System voltage	7.5 to 30 VDC (when used outside a potentially explosion environment)
Power consumption	< 1 mA blocking; conducting: > 2.1 mA
Switching frequency DC	300 [Hz]
Electrical design	NAMUR DIN EN 50227
Internal capacitance	< 155 nF
Internal inductance	< 50 µH
Ambient temperature	-20°C ... + 70°C
Certification	PTB 01 ATEX 2191
Enclosure rating	IP67 EN60947-5-6
EX enclosure rating of the PSG1 metering device with inductive proximity switch	
Device labeling	II 2G IIC T6 Gb / -20...+70C°
	II 1D IIIC T90°C Da / -20...+70C°

(Proximity switch 24-1884-2292)

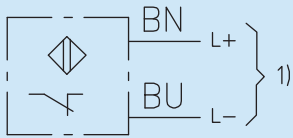

NC contact
1) Connection only via an approved NAMUR switching amplifier

IMPORTANT NOTE

Connection only to certified intrinsically safe electrical circuits with maximum values:
U_i = 15 V
I_i = 50 mA
P_i = 120 mW permitted.

4.2.4 PSG2 with inductive proximity switch 24-1884-2613

PSG2 with inductive proximity switch, Table 6			
Type	Inductive/NAMUR	EN 60947-5-6:2000	
		IEC 60947-5-6:1999	
Certification	UL and CSA		
Inductive proximity switch	Order number: **24-1884-2613**		
Internal thread	M18x1		
Nominal sensing distance Sn	1,5mm, flush mountable		
Secured sensing distance Sa	0 to 1.22 mm		
How it works:	Contact normally closed (NC)		
Rated voltage Uo	8.2 V		
Power consumption	Undamped	≥ 3 mA	
	Damped	≤ 1 mA	
Switching frequency	<400 Hz		
Electrical design	NAMUR DIN EN 50227		
Internal capacitance	50 nF		
Internal inductance	60 µH		
Ambient temperature	-20°C ... +70°C		
Enclosure rating:	IP67		
Electrical connection:	PVC cable, 15 m, 2x0.34 mm² Cable with cable box, NAMUR V1-G-N-15M-PUR, not included in the scope of delivery		
EX enclosure rating of the PSG1 metering device with inductive proximity switch			
Device labeling	II 2G IIC T6 ...T1 Gb / -20...+85°C		
	II 1D IIIC T135°C Da / -20...+85C°		

(Proximity switch 24-1884-2613)

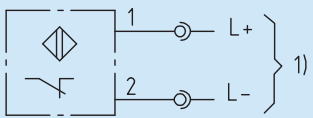

NC contact

1) Connection to NAMUR amplifier

IMPORTANT NOTE

Connection only to a certified intrinsically safe electrical circuits with maximum values:
U_i = 16 V
I_i = 25 mA
P_i = 34 mW permitted.

4.3 PSG3-ATEX General technical data

4.3.1 PSG3 - Basic metering device

Technical data PSG3, Table 7 (1/2)		
Type		hydraulically controlled
Mounting position	any	In case of attachments on moving machine parts or in case of strong vibrations (e.g., on pressing machines), the piston position of the metering device must not match the direction of movement of the machine part.
Ambient temperature range	Basic design	-20°C to +110°C
	with cycle indicator	-20°C to +90°C
	with proximity switch	-20°C to +70°C
Base plate with maximum outlets of which used outlets		6, 8, 10, 12, 14, 16, 18, 20
	without bridges	3 to 20
	with bridges	1 to 19
Material	Baseplate	AL
	Modules	Galvanized steel
	Seals	FKM (FPM)
Maximum hydraulic operating pressure	Basic design	200 bar
	with cycle indicator	150 bar
	with proximity switch	150 bar
Inlet volume flow	Up to 6 l/min grease upon request	
Volume per outlet and cycle	800-, 1200-, 1600-, 2400-, 3200 mm^3	
Piston stroke rate	max. 200/min	

Technical data PSG3, Table 7 (2/2)				
Dividing ratio of delivery volumes	1:1 to 1:14 AM	Larger dividing ratios are possible when consolidated!		
Pressure differential (with oil)	5 to 15 bar	Depending on volume index and viscosity or penetration and volumetric flow		
Starting pressure required with oil	Min. 2 bar			
Lubricant	Mineral oils, greases based on mineral oil, environmentally friendly and synthetic oils and greases			
Operating viscosity	Basic design	> 12 mm^2/s		
	- with flow regulator	12 to 350 mm^2/s		
	- with flow limiter	20 to 600 mm^2/s		
	Gear wheel-type flow indicator	20 to 600 mm^2/s		
Worked penetration		≥ 265 x 0.1 mm (up to NLGI Grade 2)		
Weight	Cycle indicator	0.05 kg	Proximity switch	0.15 kg
			Bracket for proximity switch	0.01 kg

4.3.2 PSG3 with inductive proximity switch 24-1884-2292

Technical data PSG3, Table 8

PSG3 progressive metering device with inductive proximity switch	
For further technical data, see PSG1 basic design	
Inductive proximity switch	Order number: **24-1884-2292**
Connection to switching amplifier: Yes	
Internal thread	M18x1
Housing material	Bronze, white bronze-coated, active surface: PBT
Connection	PVC cable, 2 m long / 2x0.5 mm²
Nominal sensing distance	8 mm
Output function	Contact normally closed (NC)
System voltage	7.5 to 30 VDC (when used outside a potentially explosion environment)
Power consumption	< 1 mA blocking; conducting: > 2.1 mA
Switching frequency DC	300 [Hz]
Electrical design	NAMUR DIN EN 50227
Internal capacitance	< 155 nF
Internal inductance	< 50 µH
Ambient temperature	-20°C ... + 70°C
Certification	PTB 01 ATEX 2191
EX enclosure rating of the PSG1 metering device with inductive proximity switch	
Device labeling	II 2G IIC T6 Gb / -20..+70°C
	II 1D IIIC T90°C Da / -20..+70C°

(Proximity switch
24-1884-2292)

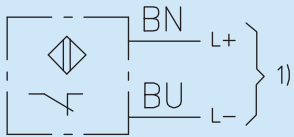

NC contact
1) Connection to NAMUR amplifier

IMPORTANT NOTE

Connection only to certified intrinsically safe electrical circuits with maximum values:
U_i = 15 V
I_i = 50 mA
P_i = 120 mW permitted.

5. Delivery, returns, storage

5.1 Delivery

After receipt of the delivery, it must be inspected for any shipping damage and for completeness on the basis of the shipping documents. Immediately inform the transport carrier of any shipping damage.

The packaging material must be preserved until any discrepancies are resolved. Safe handling must be ensured during on-site transport.

5.2 Return shipment

Before return shipment, all contaminated parts must be cleaned and properly packed (i.e., according to the requirements of the recipient country).

The product must be protected from mechanical effects such as impacts. There are no restrictions for land, air, or sea transport.

The following must be marked on the packaging of return shipments:



5.3 Storage

The following conditions apply to storage:

- Dry, low-dust, vibration-free, in closed rooms
- No corrosive, aggressive substances at the storage location (e.g., UV rays, ozone)
- Protected against animals (insects, rodents)
- If possible, keep in original package
- Protected from nearby sources of heat or cold
- In case of large temperature fluctuations or high humidity, take appropriate measures (e.g., heating) to prevent the formation of condensation water

Before usage, check products for damage that may have occurred during storage. This applies in particular to parts made of plastic (due to embrittlement).

5.4 Storage temperature range

- In cases of parts not filled with lubricant, the permitted storage temperature corresponds to the permitted ambient temperature range of the pump (see Technical data).
- In the case of parts filled with lubricant, the permitted storage temperature corresponds to:

  min. + 5°C [+41°F]
  max. + 35°C [+95°F]

If the storage temperature range is not maintained, the following work steps for replacing the lubricant may not lead to the desired result under certain circumstances.

5.5 Storage conditions for parts filled with lubricant

The conditions listed below must be maintained for the storage of products filled with lubricant.

5.5.1 Storage period up to 6 months

Filled products can be used without implementing additional measures.

5.5.2 Storage period between 6 and 18 months

Pump

- Connect pump electrically
- Switch on the pump and allow it to run, e.g. by triggering an interim lubrication until approximately 4 ccm of lubricant has emerged on every pump element
- Disconnect the pump electrically from the mains
- Remove and dispose of emerged lubricant

Metering devices

- Remove all connection lines and, if necessary, plug screws
- Connect the pump with fresh lubricant suitable for the intended purpose to the metering device manifold in such a way that the metering device manifold connection on the opposite side is open
- Allow pump to run until fresh lubricant is discharged at the metering device manifold
- Remove excess lubricant
- Reinstall plug screws and connection lines

Lines

- Remove pre-installed lines
- Ensure that both ends of the line are open
- Fill the lines completely with fresh lubricant

5.5.3 Storage period more than 18 months

To prevent faults, the manufacturer should be consulted before start-up. The basic procedure for removal of the old lubrication filling corresponds to that for storage periods between 6 and 18 months.

6. Assembly

6.1 General information

Modular metering devices (progressive metering devices) of the series PSG can be used in the context of the technical specifications given in the chapter "Technical data." They can be mounted in any alignment.
In case of installation on moving machine parts or in case of strong vibrations (e.g., on pressing machines), the piston position of the metering device must not correspond with the direction of movement of the machine part.
To prevent flow resistance, ensure that both the customer's supply line and the output lines are sufficiently large.
Only qualified technical personnel may install the products specified in the instructions.
During assembly and during any drilling work, always pay attention to the following:

- Before installing the metering device, ensure that all holes, screw unions, and connecting lines that the metering device contacts are clean and free of metal chips.
- Existing supply lines must not be damaged by assembly work.
- Other units must not be damaged by assembly work.
- The metering device must not be installed within range of moving parts.
- The metering device must be installed at an adequate distance from sources of heat.
- Maintain safety clearances and comply with local regulations for assembly and accident prevention.
- Observe the IP enclosure rating of the product
- The mounting position of the product is as shown in the assembly drawing.
- Follow the mounting position requirements in "Technical data" (Chapter 4)
- The product has an equipotential bonding connection (screw M4). This is marked by the ⏚ symbol. The product and its equipotential bonding connection must be connected to the equipotential bonding of the main machine.

6.2 Assembly location

The product should, to the extent possible, be protected from humidity and vibration, and should be installed so that it is easily accessible. This facilitates further installation, inspection, and maintenance work on the product.

WARNING

Supply lines or moving parts
When drilling the assembly holes, you must be careful of any supply lines or other units, as well as of other hazards such as moving components.
Maintain safety clearances and comply with local regulations for assembly and accident prevention.

IMPORTANT NOTE

Follow the safety instructions on the lubricant's safety data sheet.

DANGER

Explosion
Prior to assembling the ATEX progressive metering devices, all safety-related ATEX rules and certificates must be present and maintained. It must be ensured (checked) that no potentially explosive atmosphere is present.
The applicable ATEX Directives must be observed.

DANGER

Excessive switching voltage hazard
An isolating amplifier must be inserted if the sensor will be used in a potentially explosive atmosphere (ATEX). The maximum permissible voltage U_i must not be exceeded.

DANGER

Explosion hazard from non-ATEX-compliant attachments and monitoring equipment.
Only attachments and monitoring equipment approved by SKF for the ATEX progressive metering devices may be installed.

6.3 Mechanical connection

6.3.1 Minimum mounting dimensions

To ensure enough space for maintenance work and for any disassembly of the product, ensure that the minimum mounting dimensions listed below (Figs. 10 to 20) are maintained.

6.4 Installing the PSG1

6.4.1 Basic design PSG1-ATEX

Fig. 10 **PSG1-ATEX in basic design**

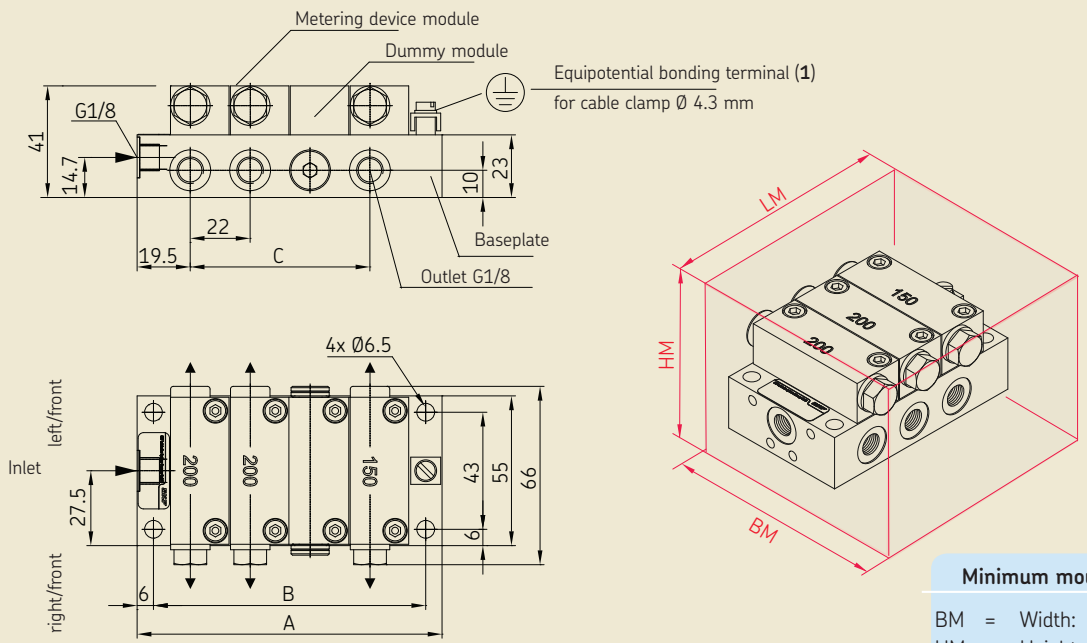

Minimum mounting dimensions			
BM	=	Width:	100 mm
HM	=	Height:	100 mm
LM	=	Length:	A+80 mm

IMPORTANT NOTE

The inlet and the outlet screw unions are not included in the basic design (see Accessories). The weight specifications include the weight of the baseplate with modules.

PSG1 dimensions

Quantity of the modules	Dim. A [mm]	Dim. B [mm	Dim. C [mm	Weight [kg]
3	90	78	44	0.77
4	112	100	66	1.00
5	134	122	88	1.23
6	156	144	110	1.46
7	178	166	132	1.69
8	200	188	154	1.92
9	222	210	176	2.15
10	244	232	198	2.39

Technical data- see Chapter 4.1

6.4.2 PSG1 tightening torques

The specified torques must be observed during assembly and repair.

Tightening torques		
Item	Number of screws	[Nm]
Baseplate	4	9
Module	2	6
Threaded joint		
-Inlet	1	35
-Outlet max.	20	35
Banjo bolt (crossporting)		12
Setscrew "G"		approx. 8 [1])
Plug screw		10+1

Specifications for screws of strength class 8.8, subject to the following installation instructions, base material: Steel

1) Strength class to DIN EN ISO 898, Part 5

6

6.4.3 PSG1-ATEX with visual cycle indicator (ZY)

Fig. 11 **PSG1-ATEX with visual cycle indicator (ZY)**

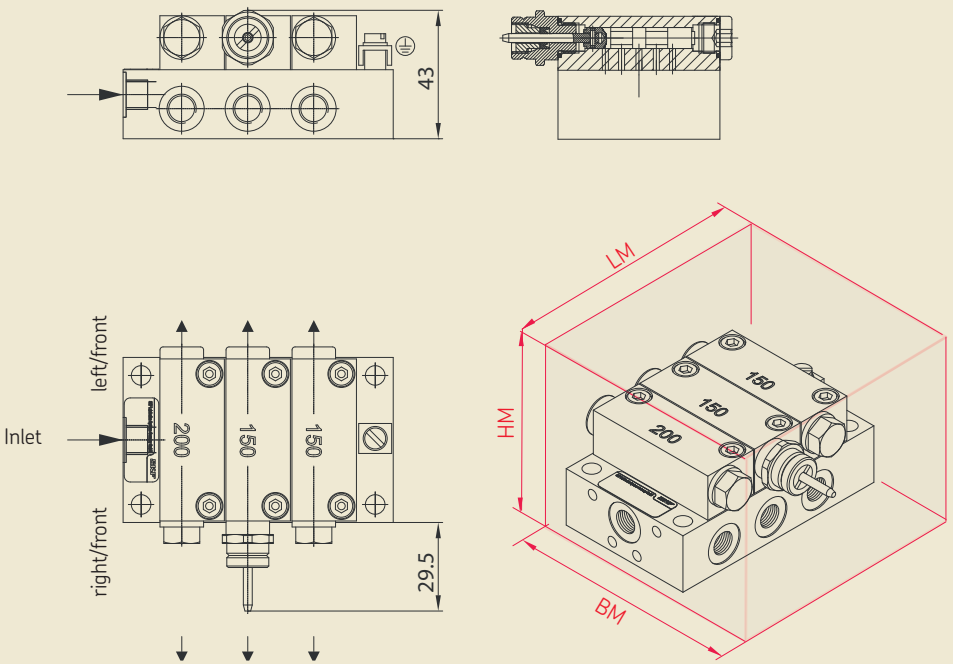

Note!
The cycle indicator ZY can be attached to either the left or right side of a 200 mm^3 or 250 mm^3 metering device module. It is attached to the right side at the factory. It should not be attached to the first or last metering device module.

Minimum mounting dimensions

BM	=	Width:	130 mm
HM	=	Height:	100 mm
LM	=	Length:	A+80 mm

6.4.4 PSG1-ATEX with visual cycle indicator, housing, and inductive proximity switch (ZS)

Fig. 12 **PSG1 with visual cycle indicator, housing, and inductive proximity switch (ZS)**

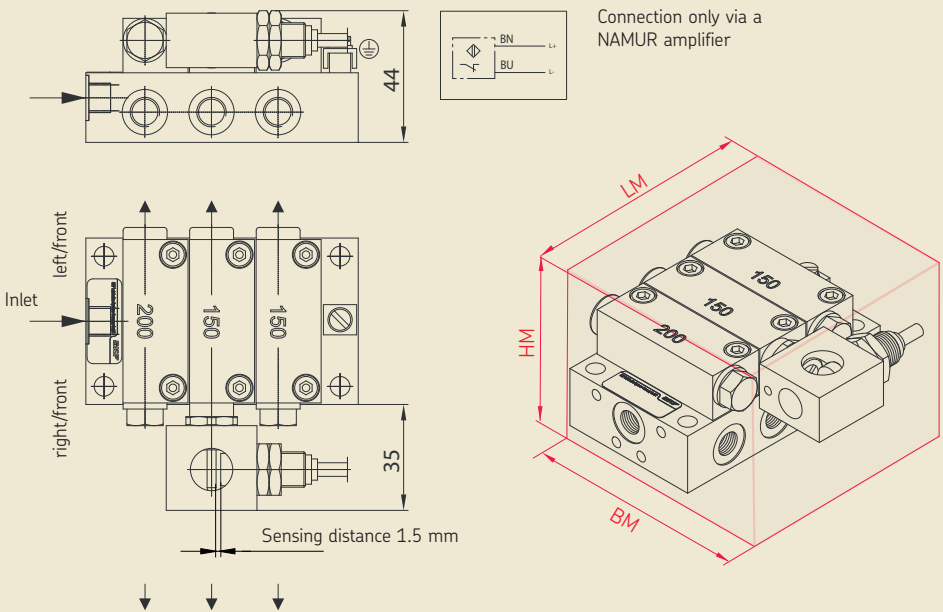

Note!
The proximity switch can be attached to either the left or right side of the 200 mm³ and 250 mm³ modules of design ZY. It is attached to the right side at the factory.
It should not be attached to the first or last module.

Spare part no.
Inductive proximity switch **24-1884-2288**

Minimum mounting dimensions			
BM	=	Width:	140 mm
HM	=	Height:	100 mm
LM	=	Length:	A+80 mm

6

6.5 Assembly PSG2-ATEX

6.5.1 Basic design PSG2-ATEX

Fig. 13 **PSG2-ATEX in basic design**

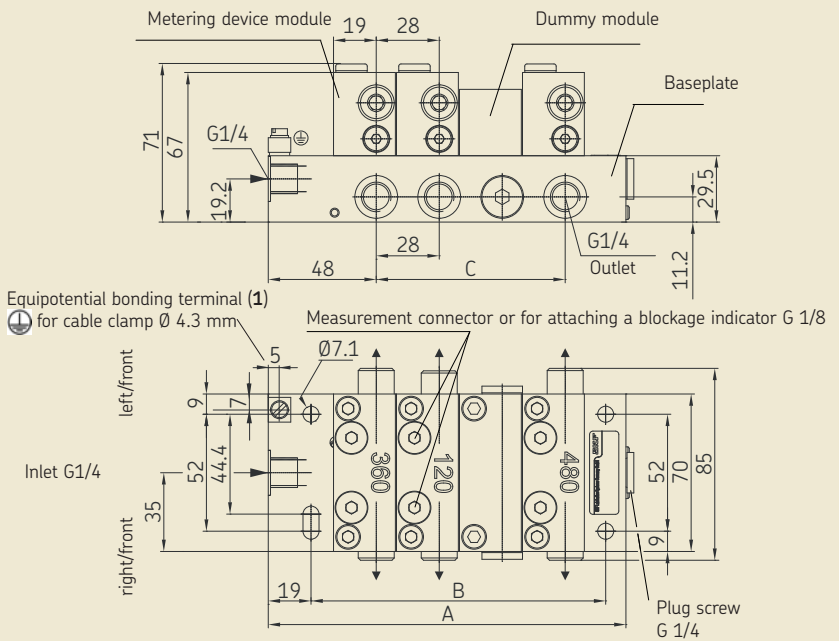

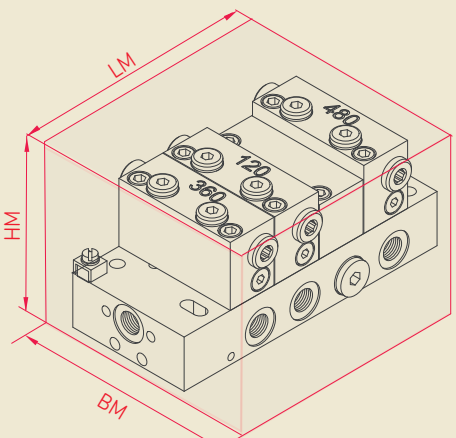

Minimum mounting dimensions

BM	=	Width:	140 mm
HM	=	Height:	100 mm
LM	=	Length:	A+80 mm

6.5.2 PSG2 tightening torques

IMPORTANT NOTE

The inlet and the outlet screw unions are not included in the basic design (see Accessories). The weight specifications include the weight of the baseplate with modules.

PSG2 dimensions

Quantity of the modules	Dim. A [mm]	Dim. B [mm	Dim. C [mm	Weight [kg]
3	131	103	56	2.24
4	159	131	84	2.85
5	187	159	112	3.49
6	215	187	140	4.10
7	243	215	168	4.78
8	271	243	196	5.42
9	299	271	224	6.06
10	327	299	252	6.73

Technical data- see Chapter 4.2

The specified torques must be observed during assembly and repair.

Tightening torques		
Item	Number of screws	[Nm]
Baseplate	4	11
Module	2	10
Threaded joint		
-Inlet	1	35
-Outlet max.	20	35
Banjo bolt (crossporting)		12
Setscrew "G"		approx. 8 [1])
Plug screw		20+1

Specifications for screws of strength class 8.8, subject to the following installation instructions, base material: Steel

1) Strength class to DIN EN ISO 898, Part 5

6

6.5.3 PSG2-ATEX with visual cycle indicator (ZY)

Fig. 14 **PSG2 with visual cycle indicator (ZY)**

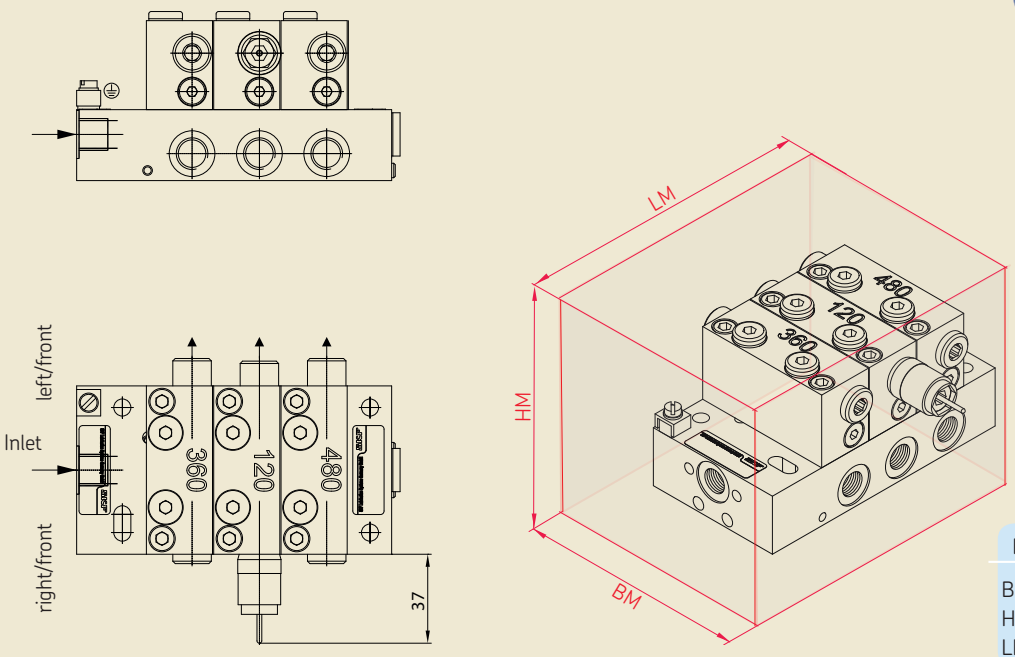

Note!

The cycle indicator can be attached to either the left or right side of the metering device modules (not on the 60 mm^3 module). It is attached to the right side at the factory. It should not be attached to the first or last module.

Minimum mounting dimensions

BM	=	Width:	170 mm
HM	=	Height:	100 mm
LM	=	Length:	A+80 mm

6.5.4 PSG2-ATEX with pressure-resistant inductive proximity switch 24-1884-2292

Fig. 15 **ATEX metering device with inductive proximity switch**

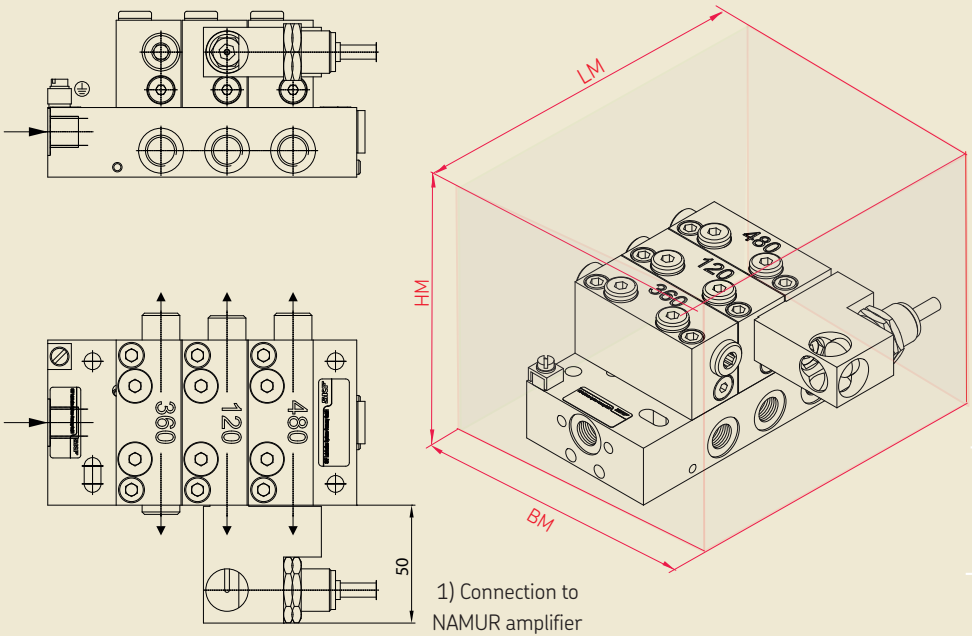

Note!
The proximity switch can be attached to either the left or right side of the modules on design ZY. It is attached to the right side at the factory. It should not be attached to the first or last module.

Spare part no.
Inductive proximity switch
24-1884-2292

Minimum mounting dimensions			
BM	=	Width:	170 mm
HM	=	Height:	100 mm
LM	=	Length:	A+80 mm

6

6.5.5 PSG2-ATEX with pressure-resistant inductive proximity switch 24-1884-2613

Fig. 16 **ATEX metering device with inductive proximity switch**

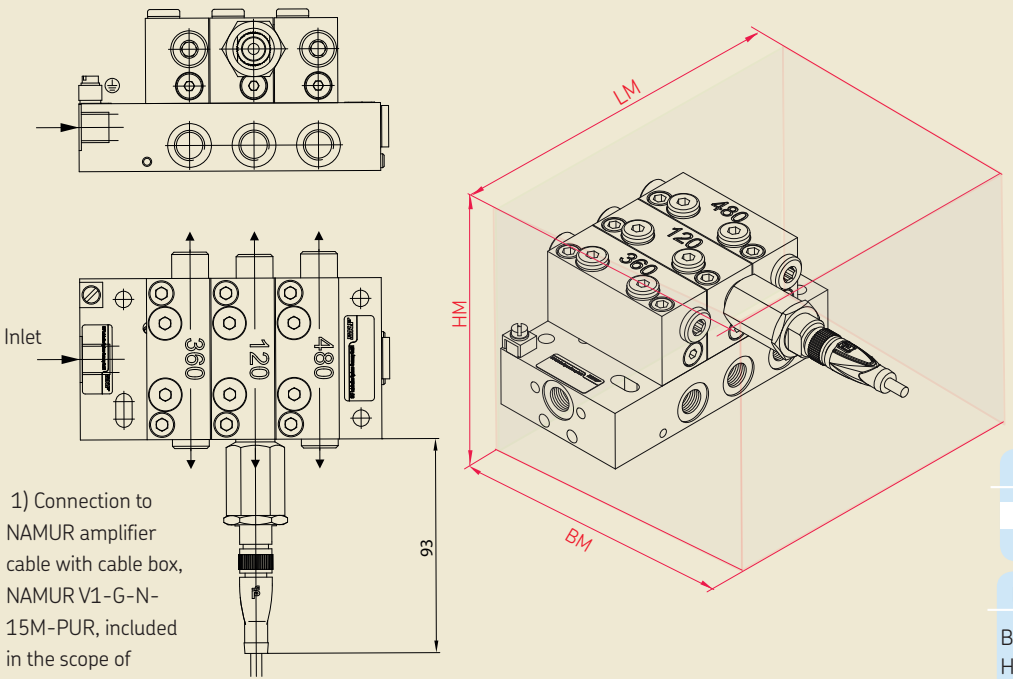

1) Connection to NAMUR amplifier cable with cable box, NAMUR V1-G-N-15M-PUR, included in the scope of delivery.

Note!
The proximity switch can be attached to either the left or right side of the modules on design ZY. It is attached to the right side at the factory. It should not be attached to the first or last module.

Spare part no.
Inductive proximity switch **24-1884-2613**

Minimum mounting dimensions			
BM	=	Width:	200 mm
HM	=	Height:	100 mm
LM	=	Length:	A+80 mm

6.5.6 PSG2-ATEX with 2/2 directional solenoid valve 24-1884-2292

Fig. 17 **PSG2 with 2/2 directional solenoid valve**

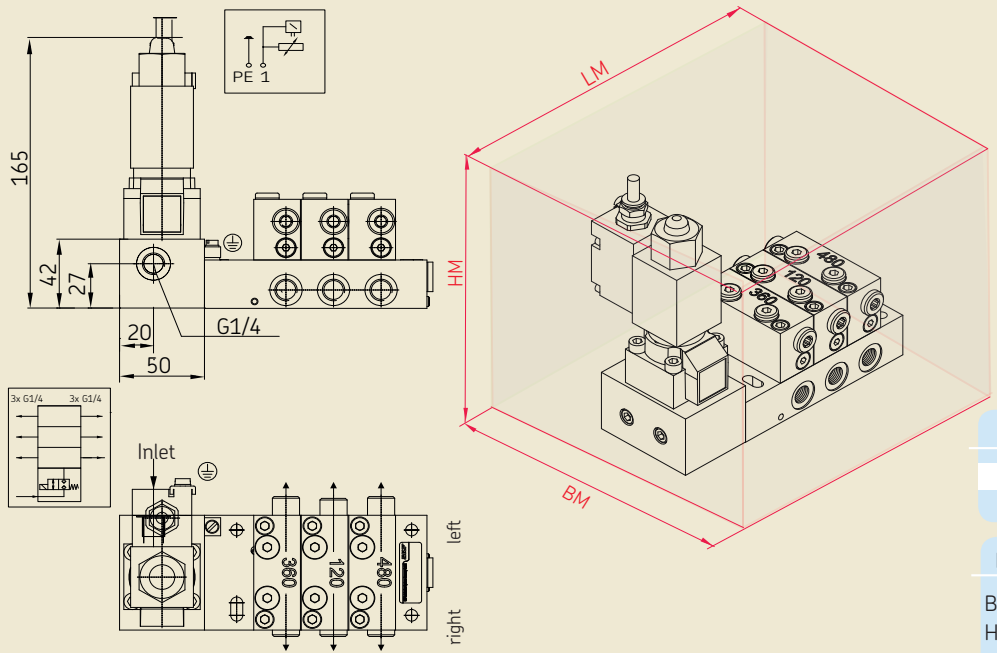

Note!
Use 2/2 directional solenoid valve only for oil applications.

Spare part no.
2/2 directional solenoid valve **24-1884-2292**

Minimum mounting dimensions

BM	=	Width:	100 mm
HM	=	Height:	200 mm
LM	=	Length:	A+80 mm

6

6.6 Assembly PSG3-ATEX

6.6.1 Basic design PSG3

Fig. 18 **PSG3 in basic design**

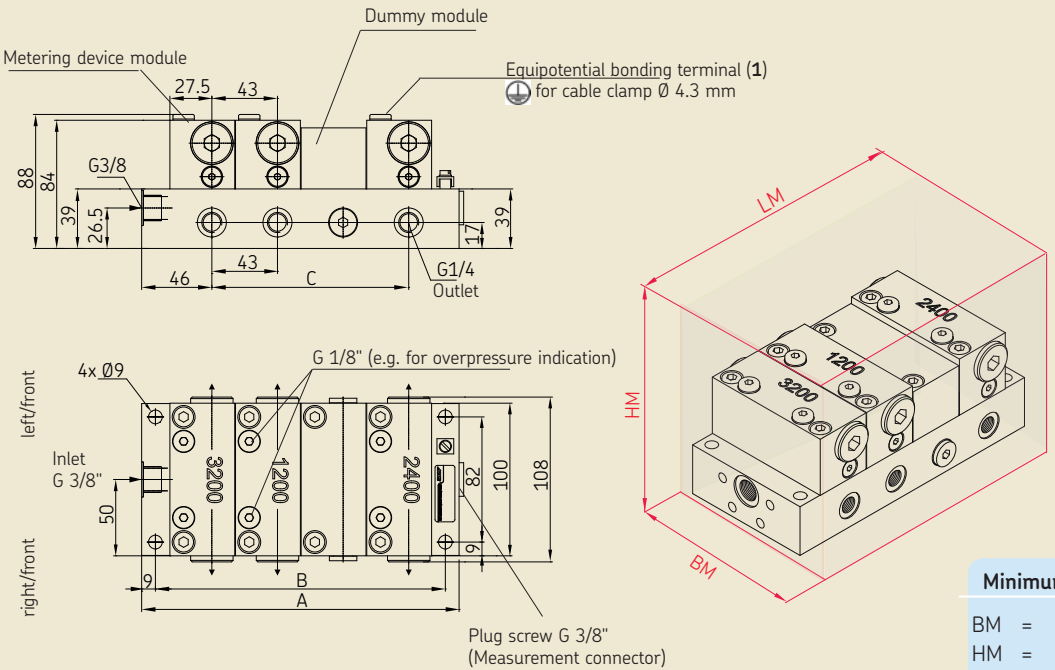

Minimum mounting dimensions			
BM	=	Width:	150 mm
HM	=	Height:	120 mm
LM	=	Length:	A+80 mm

IMPORTANT NOTE

The inlet and the outlet screw unions are not included in the basic design (see Accessories). The weight specifications include the weight of the baseplate with modules.

PSG3 dimensions

Quantity of the modules	Dim. A [mm]	Dim. B [mm	Dim. C [mm	Weight [kg]
3	165	147	86	6.83
4	208	190	129	8.55
5	251	233	172	10.27
6	294	276	215	11.99
7	337	319	258	13.71
8	380	362	301	15.43
9	423	405	344	17.15
10	466	448	387	18.87

Technical data- see Chapter 4.3

6.6.2 PSG3 tightening torques

The specified torques must be observed during assembly and repair.

Tightening torques		
Item	Number of screws	[Nm]
Baseplate	4	25
Module	2	23
Threaded joint		
-Inlet	1	45
-Outlet max.	20	35
Banjo bolt (crossporting)		20
Setscrew "G"		approx. 8 1)
Plug screw		70 +1

Specifications for screws of strength class 8.8, subject to the following installation instructions, base material: Steel

1) Strength class to DIN EN ISO 898, Part 5

6.6.3 PSG3-ATEX with visual cycle indicator (ZY)

Fig. 19 **PSG3 with visual cycle indicator**

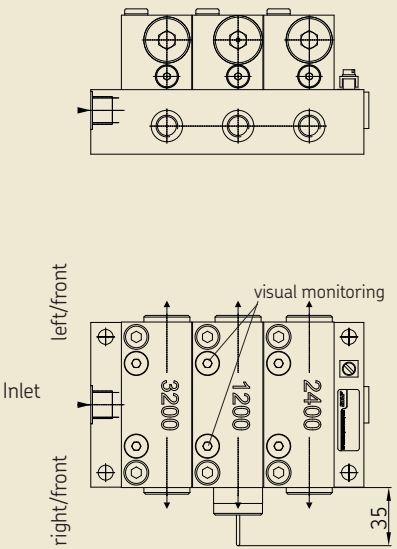

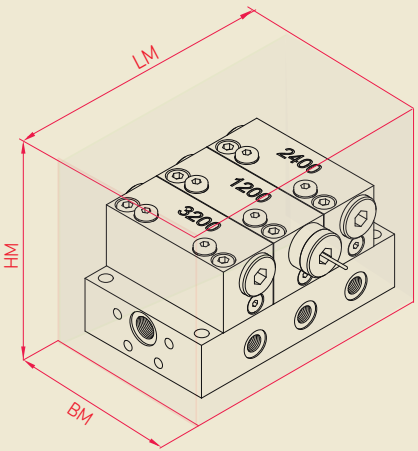

Note!

The cycle indicator can be attached to either the left or right side of the metering device modules (not on the 60 mm³ module). It is attached to the right side at the factory. It should not be attached to the first or last module.

Minimum mounting dimensions

BM	=	Width:	180 mm
HM	=	Height:	120 mm
LM	=	Length:	A+80 mm

6.6.4 PSG3 with cycle indicator, housing, and inductive proximity switch 24-1884-2292

Fig. 20 **PSG3 with visual cycle indicator, housing, and proximity switch (ZS)**

Depiction of optional attachment of the cycle switch at the 2nd module, right side

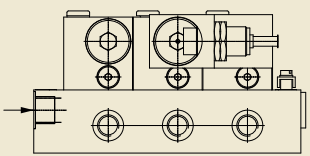

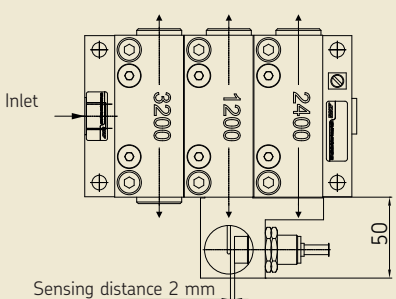

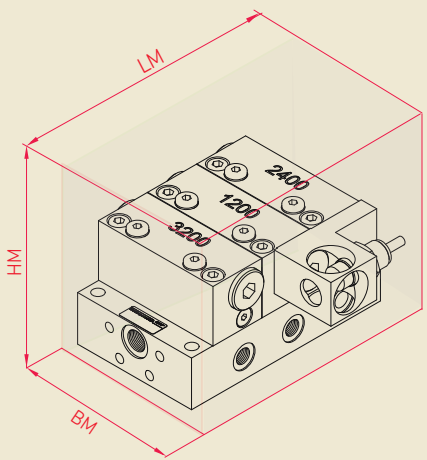

Note!

The proximity switch can be attached to either the left or right side on design ZY. It is attached to the right side at the factory. It should not be attached to the first or last module.

Minimum mounting dimensions

BM	=	Width:	190 mm
HM	=	Height:	120 mm
LM	=	Length:	A+80 mm

6

6.7 Installing a PSG modular metering device

See: ☞ PSG1 - see Chapter 6.4.
☞ PSG2 - see Chapter 6.5
☞ PSG3 - see Chapter 6.6.

- Check the parallelism of the surface on which the component is to be installed. Stress-free installation of the component must be ensured.

- Check for any fouling on the threaded holes and on the surface on which the component is to be installed, and clean if needed

- Place the modular metering device on the mounting surface and fasten it finger-tight using four galvanized cylinder hexagon socket screws

Cheese-head screws EN ISO 4762:
PSG1 = M6x30-8.8
PSG2 = M6x40-8.8
PSG3 = M8x50-8.8

- Align the modular metering device

- Cylinder hexagon socket screws diagonal with a tightening torque of:
PSG1 = 9 Nm
PSG2 = 9 Nm
PSG3 = 25 Nm

If necessary:
Tighten the inlet port screws

- Apply the inlet screw union to the metering device inlet and tighten using a tightening torque of:
PSG1 (G 1/8) = 9 Nm
PSG2 = (G 1/4) = 35 Nm
PSG3 = (G 3/8) = 45 Nm

If necessary:
Tighten the outlet port screws

- Apply outlet port screws to the metering device outlet and tighten using a tightening torque of:
PSG1 (G 1/8) = 9 Nm
PSG2/PSG3 = (G 1/4) = 35 Nm

☞ The product and its equipotential bonding connection must be connected to the equipotential bonding of the main machine.

WARNING

Follow ATEX guidelines when connecting the equipotential bonding cable!

- Connect customer-side equipotential bonding cable to equipotential bonding terminal

6.8 Consolidation of outlets

☞ See Figure 21 and Fig. 4

The volumetric flow of an outlet can be doubled by internal consolidation of two opposite outlets. To do this, the setscrew **G** in the baseplate (the left outlet as seen from the metering device inlet) must be removed. The outlet in the baseplate that is no longer needed is to be closed using a washer **D** and a plug screw **V**.

- If fitted, loosen and remove the right and left outlet screw unions (from the consolidating module)
- Insert a hexagon socket screw key (WAF 2.5) into the left outlet hole
- Unscrew and remove setscrew **G** and place it aside
- Screw the plug screw **V** with washer **D** into the desired outlet hole
- If fitted, screw in the right or left outlet screw union

Designation	Order Number
Setscrew "G"	DIN 915-AM5x8-45H
G 1/8" plug Screw "V" with packing ring "D"	466-419-001

Fig. 21 **Consolidation of outlets**

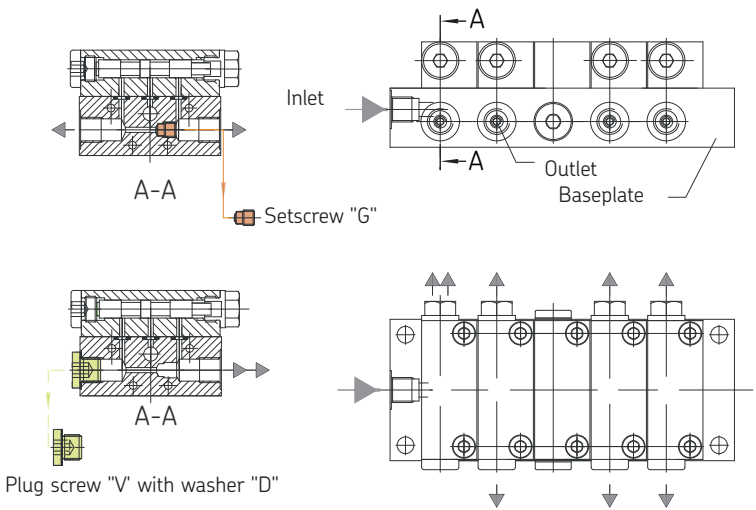

6.9 Changing a PSG module

☞ See Figure 22

IMPORTANT NOTE

For the purpose of self-venting, the smallest module (PSG1 = 50 mm^3/stroke, PSG2 = 60 mm^3/stroke, PSG3 = 800 mm^3/stroke) should not be installed in the first position (as viewed from the inlet).

- Both cylinder hexagon socket screws (**1**)
  PSG1 = M5x25-8.8 DIN6912
  PSG2 = M6x40-8.8 DIN EN ISO4762
  PSG3 = M8x50-8.8 DIN EN ISO4762
  of the module being replaced (**2**).
- Carefully detach the old module with O-rings (**3**) from the baseplate and place it aside
- Lightly coat new O-rings (**3**) (7x) with oil, then carefully insert them in the baseplate

☞ Prior to beginning installation of the new module, ensure that each of the O-rings is properly seated in its respective groove.

- Carefully place the new module (**2**) on the baseplate (**4**)
- Both cylinder hexagon socket screws (**1**) into the module (2) and align the module
- Both cylinder hexagon socket screws (**1**) of the new module using a tightening torque of:
  PSG1 = 6 Nm
  PSG2 = 10 Nm
  PSG3 = 23 Nm

Fig. 22 **Module change, PSG1 example**

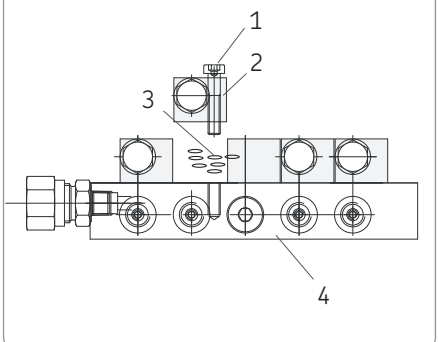

6.10 Connecting the lubricant lines

IMPORTANT NOTE

Outlets of a progressive metering device that are not needed must not be closed because this will cause the metering device to block.
Consolidate unneeded outlets with a neighboring outlet or connect them to the pump via the return line.

Connect the lubricant lines in such a way that no forces are transferred to the product (stress-free connection).

CAUTION

Risk of slipping
Exercise caution when handling lubricants; immediately bind and remove any leaked lubricants.

Explosion hazard
The customer must take appropriate precautions to ensure that no contamination enters the lubricant and thus the metering device.

All components of the centralized lubrication system must be designed for:

- The maximum pressure that occurs
- The permissible temperature range
- The delivery volume and the lubricant to be fed

Secure the centralized lubrication system against excessive pressure using an appropriate pressure regulating valve.

Observe the following assembly information for safe and trouble-free operation.

- Use only clean components and prefilled lubrication lines
- The main lubricant line should be arranged ascending and be able to be bled at the highest point. Lubrication lines should always be arranged so that air inclusions cannot form anywhere
- Install lubricant metering devices at the end of the main lubricant line such that the outlets of the lubricant metering devices point upwards
- If the system configuration requires that the lubricant metering devices be arranged below the main lubricant line, they should not be placed at the end of the main lubricant line

- The flow of lubricant should not be impeded by the mounting of sharp bends, angle valves, flap valves, seals protruding inward, or changes in cross-section (large to small). Unavoidable changes in the cross-section in lubrication lines must have smooth transitions
- Use only grounded steel pipes or high-pressure hoses or plastic pressure pipes approved for potentially explosive areas
- For higher operating pressures up to 250 bar, SKF compression fittings conforming to DIN 2353 can be used. If using fittings from other manufacturers, pay careful attention to the assembly instructions and technical specifications provided by the manufacturer

6.10.1 Installing the lubrication piping

☞ See Figure 23

- Deburr the connecting end of the lubrication line (**1**)
- Loosen the union nut (**2**) and cutting sleeve (**3**) from the threaded socket (**4**)
- Screw the threaded socket into the metering device outlet (**4**) and tighten it
- Insert the lubrication line (**1**) into the union nut (**2**) and cutting sleeve (**3**)
- Insert the lubrication line (**1**), union nut (**2**), and cutting sleeve (**3**) into the threaded socket (**4**)
- Apply the union nut (**2**) to the thread of the threaded socket (**4**) and gently tighten the union nut (**2**) by hand
- Tighten the union nut (**2**) with an open-end wrench

- Tightening torques
PSG1- see Chapter 6.4.2
PSG2- see Chapter 6.5.2
PSG3- see Chapter 6.6.2

Fig. 23 **Lubrication line connection**

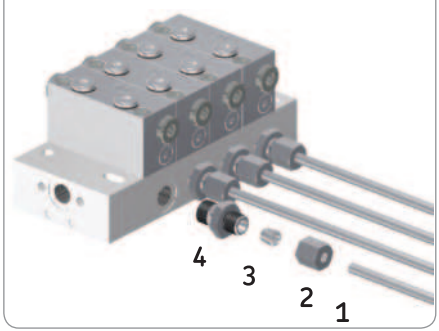

6.11 Attachment of bridges (crossporting)

☞ See Figures 24 to 25

☞ The technical data for each bridge can be found in Chapter 14, page 99.

- If fitted, unscrew and remove outlet screw unions on the right (right bridge mounting) or left (left bridge mounting)
- Using banjo bolts, attach the bridge to the relevant metering device outlets and screw on by hand
- Align the bridge to the metering device
- Tighten the banjo bolts using a tightening torque of 9 Nm
- Perform a leak test

Fig. 24 **PSG1-Crossporting**

3-bridge, with one outlet, with check valve, **(G1/8)**
Order No.
Tube Ø 4 mm
24-2151-3763
Tube Ø 6 mm
24-2151-3765

2-bridge, with one outlet, with check valve, (G1/8)

order No.
Tube Ø 4 mm
24-2151-3762
Tube Ø 6 mm
24-2151-3764

3-bridge, without outlet, (G1/8)
Order No.
24-2151-3761

2-bridge, without outlet, (G1/8)
Order No.
24-2151-3760

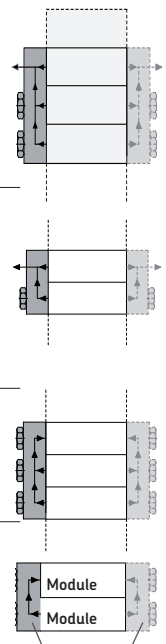

Crossporting, mounting position left or right

Fig. 25 **PSG2-Crossporting**

Designation
3-bridge, with one outlet
Order No.
G 1/4" **24-2151-3733**

Designation
2-bridge, with one outlet
Order No.
G 1/4" **24-2151-3732**

Designation
3-bridge, without outlet
Order No.
G 1/4" **24-2151-3731**

Designation
2-bridge, without outlet port
Order No.
G 1/4" **24-2151-3730**

Bridge, installation position left
or
Bridge, installation position right

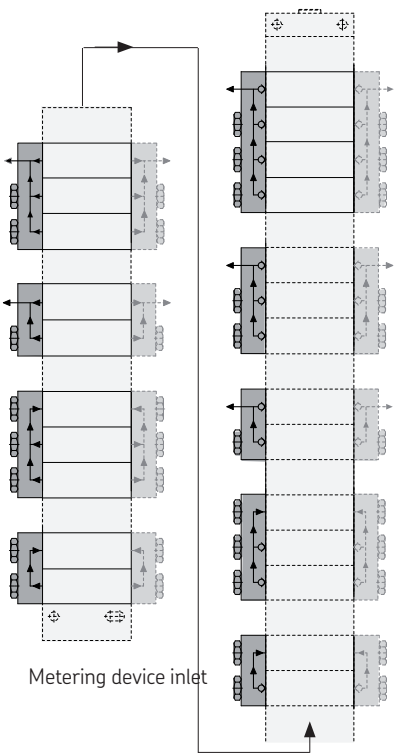

Metering device inlet

Designation
4-bridge, with one outlet,
with check valves
Order No.
G 1/4" **24-2151-3739**
UNF 24-2151-3754

Designation
3-bridge, with one outlet,
with check valves
Order No.
G 1/4" **24-2151-3395**
UNF 24-2151-3755

Designation
2-bridge, with one outlet,
with check valves
Order No.
G 1/4" **24-2151-3394**
UNF 24-2151-3752

Designation
3-bridge, without outlet,
with check valves
Order No.
G 1/4" **24-2151-3397**
UNF 24-2151-3751

Designation
2-bridge, without outlet,
with check valve
Order No.
G 1/4" **24-2151-3390**
UNF 24-2151-3750

Fig. 26 **PSG3-Crossporting**

Designation
3-bridge, with one outlet
Order No.
G 1/4" **24-2151-3737**

Designation
2-bridge, with one outlet
Order No.
G 1/4" **24-2151-3736**

Designation
3-bridge, without outlet
Order No.
G 1/4" **24-2151-3735**

Designation
2-bridge, without outlet port
Order No.
G 1/4" **24-2151-3734**

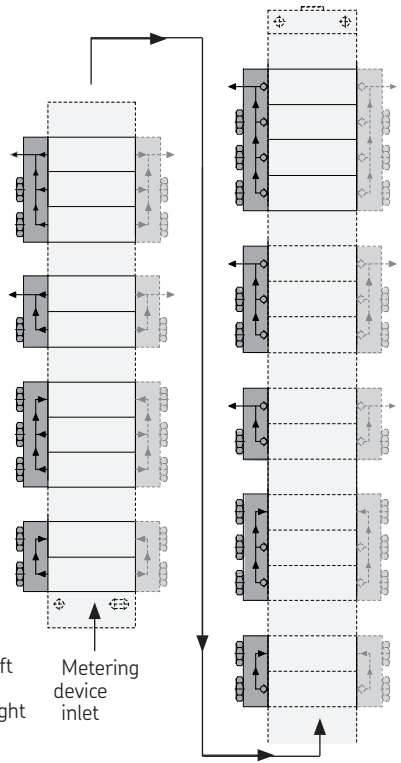

Designation
4-bridge, with one outlet,
with check valves
Order No.
on request

Designation
3-bridge, with one outlet,
with check valves
Order No.
G 1/4" **24-2151-3338**
UNF 24-2151-4143

Designation
2-bridge, with one outlet,
with check valves
Order No.
G 1/4" **24-2151-3396**
UNF 24-2151-3753

Designation
3-bridge, without outlet,
with check valves
Order No.
G 1/4" **24-2151-3393**
UNF 24-2151-4142

Designation
2-bridge, without outlet,
with check valve
Order No.
G 1/4" **24-2151-3392**
UNF 24-2151-4141

6.12 Establishing equipotential bonding

-See Figure 27

The product has an equipotential bonding connection (screw M4).

The product and its equipotential bonding connection must be connected to the equipotential bonding of the main machine.

	WARNING
EX	**Explosion protection** The cross-section of the standard grounding cable to be supplied by the customer must be at least 2 mm².

- Loosen the clamping screw (**2**) on the ground terminal (**1**)
- Insert the cable end of the standard grounding cable (**3**) into the ground terminal
- Tighten the clamping screw (**2**)
- Perform PE continuity test

Fig. 27 **Equipotential bonding**

Equipotential bonding connection (screw M4)

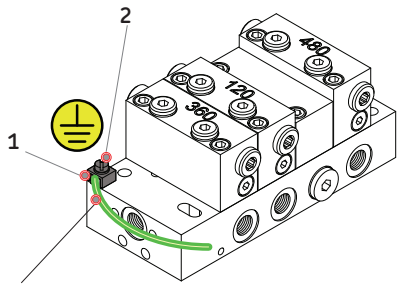

3 PE cable provided by customer

	WARNING
EX	Follow ATEX guidelines when connecting the equipotential bonding cable!

6.13 Electrical connection

DANGER

Excessive switching voltage hazard

If the inductive proximity switch is used in a potentially explosive atmosphere (ATEX), then a (NAMUR) isolating amplifier, with connection to a certified intrinsically safe electrical circuit, must be inserted!

The following permitted maximum values must not be exceeded:

Sensor **24-1884-2288**

Sensor **24-1884-2292**

U_i = 15 V / I_i = 50 mA / P_i = 120 mW

Sensor **24-1884-2613**

U_i = 16 V / I_i = 25 mA / P_i = 34 mW

Only attachments and monitoring equipment approved by SKF for the metering devices may be installed.

6.13.1 Inductive proximity switch 24-1884-2288

-See Figure 28

- Connect inductive proximity switch according to terminal diagram in Figure 28

Fig. 28 Connect **Inductive NAMUR Sensor 24-1884-2288**

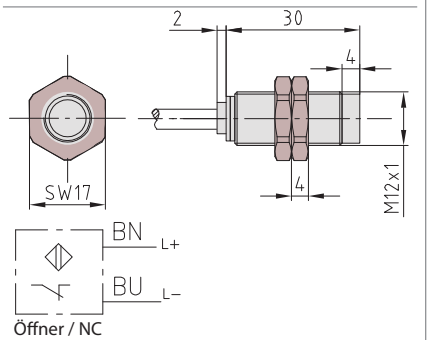

II 1G Ex ia IIC T6 Ga/ -20..+70C°
II 1D Ex ia IIIC T90°C Da / -20...+70°C

Spare parts

Designation	Order number
ATEX Inductive proximity switch	24-1884-2288

6.13.2 Inductive proximity switch 24-1884-2292

-See Figure 29

- Connect inductive proximity switch according to terminal diagram in Figure 29

Fig. 29 Connect **Inductive NAMUR Sensor 24-1884-2292**

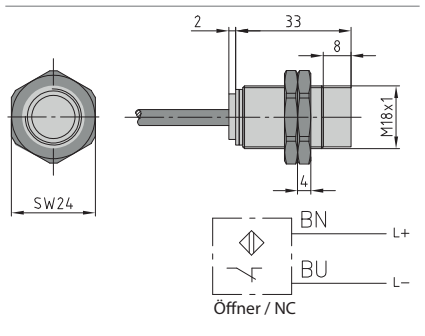

II 1G Ex ia IIC T6 Ga/ -20..+70C°
II 1D Ex ia IIIC T90°C Da / -20...+70°C

Spare parts

Designation	Order number
ATEX Inductive proximity switch	24-1884-2292

6.13.3 Inductive proximity switch 24-1884-2613

-See Figure 30

- Connect inductive proximity switch according to terminal diagram in Figure 30

Fig. 30 Connect **Inductive NAMUR Sensor 24-1884-2613**

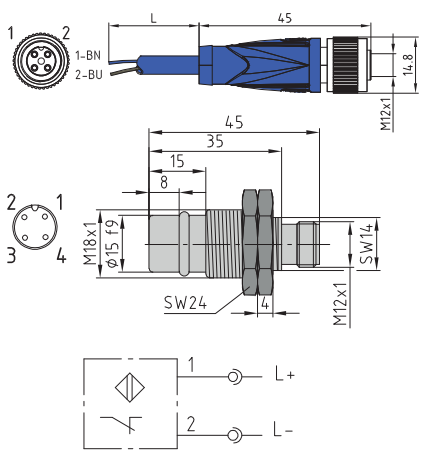

II 2G Ex ia IIC T6...T1 Gb
II 1D Ex ia IIIC T135°C Da

Spare parts/accessories

Designation	Order number
ATEX Inductive proximity switch	24-1884-2613

Cable box with cable (optional)

Length	Type	Order number
5 m	V1-G-N-5M-PUR	24-1882-5005
10 m	V1-G-N-10M-PUR	24-1882-5010
15 m	V1-G-N-15M-PUR	24-1882-5015

6.13.4 Connecting directional solenoid valve 24-1254-2212

-See Figure 31

☞ See electrical data of the directional solenoid valves, Chapter 4

- Connect directional solenoid valve according to terminal diagram in Figure 31

Fig. 31 **Connecting directional solenoid valves**

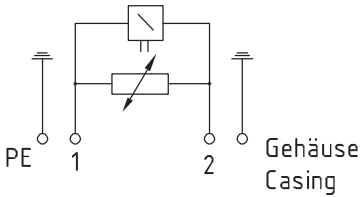

II 2 G Ex d IIB+H2 T4 Gb
II 2 D Ex tb IIIC T135°C Db

Spare parts

Designation	Order number
ATEX 2/2 directional solenoid valve	24-1254-2212

7. First start-up

	CAUTION
EX	**Explosion hazard** The product and its equipotential bonding connection must be connected to the equipotential bonding of the main machine.

7.1 Venting a grease progressive system

-See Figure 32

The progressive metering devices are subjected to functional monitoring using oil at the factory. It is possible that oil will discharge from the metering device at the start of commissioning. The venting process starts at the main metering device and proceeds to the secondary metering devices, and from there to the lubrication points.

- Connect the hand lever grease gun or lubricating device to the metering device inlet (**1**) or, if present, to the emergency lubricant nipple attached to the metering device
- Actuate the hand lever grease gun or lubricating device until bubble-free lubricant discharges at all metering device outlets
- Use a hand lever grease gun or lubricating device to perform a flow check on or fill all lubrication points (**2**) that will be connected.
- Completely fill lubrication lines with grease and connect to the metering device outlets
- Actuate the grease lubrication pump (**3**), hand lever grease gun (**4**) or lubricating device until bubble-free lubricant discharges at the ends of the lubrication lines

Fig. 32 **Example of progressive system with KFGS/KFGL pump unit**

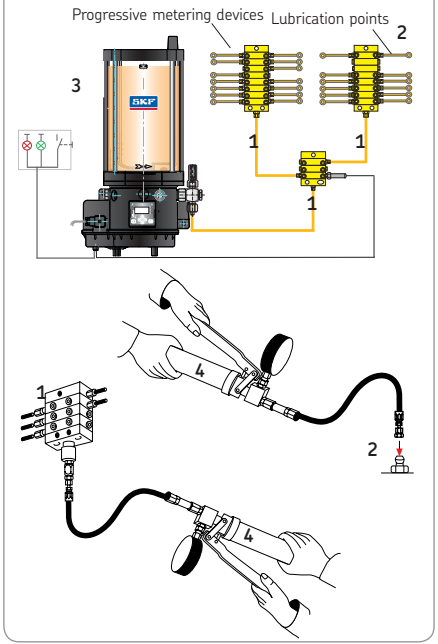

7.2 Venting an oil progressive system

-See Figure 33

A requirement for venting an oil progressive system is that the system has already been fully assembled.

- Slightly loosen the main lubrication line on the hand pump or pump unit, actuate the pump/pump unit until bubble-free oil discharges at the main lubrication line
- Retighten the main lubrication line at the pump
- Slightly loosen the main lubrication line on the main metering device, actuate the pump/pump unit until bubble-free oil discharges at the main lubrication line/ metering device
- Retighten the main lubrication line at the main metering device
- Slightly loosen the main lubrication lines of the main metering device at the outlets, actuate the pump/pump unit until bubble-free oil discharges at the outlets
- Retighten the lubrication line at the main metering device
- Repeat venting at the secondary lubrication lines, secondary metering device, and lubrication lines.
- An additional venting as described below is necessary if problems occur while venting the metering devices (air still in the metering device, too little lubricant discharge).
- Slightly loosen the right and left plug screws at the last metering device module as viewed from the metering device outlet (do not unscrew!)
- Actuate the pump/pump unit until bubble-free oil discharges at the plug screws
- Retighten the left and right plug screws

7.3 Checklist for first start-up

Fig. 33 **Position of plug screws**

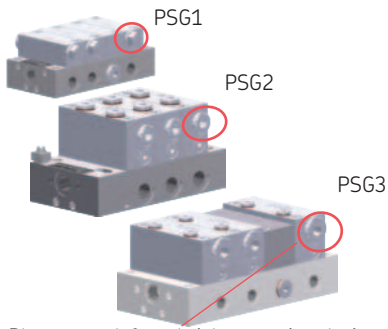

Plug screw, left and right metering device side

To ensure safety and functionality, the person specified by the operator is required to perform the following inspections. Any detected deficiencies must be resolved immediately. The correction of deficiencies must be done exclusively by a specialist competent and authorized to do so.

Checklist for first start-up

7.4 Inspections before first start-up	YES	NO
Electrical connection (inductive proximity switch) established correctly	☐	☐
Mechanical connection established correctly	☐	☐
The performance characteristics for the aforementioned connections match the specifications in "Technical data"	☐	☐
All components such as lubrication lines and metering devices are correctly installed	☐	☐
Product is protected by a suitable pressure relief valve	☐	☐
No apparent damage, contamination, or corrosion	☐	☐
Any dismantled protective and monitoring equipment is fully reinstalled and functional	☐	☐
Equipotential bonding fully present, properly connected, and electrically continuous	☐	☐
No accumulated dust present	☐	☐
7.5 Inspections during first start-up		
No unusual noises, vibrations, moisture accumulation, odors present	☐	☐
No undesired discharge of lubricant at connections (leakage)	☐	☐
Lubricant is fed without bubbles	☐	☐
The bearings and friction points requiring lubrication receive the planned lubricant volume	☐	☐

8. Operation

SKF products operate automatically.

The activities required during normal operation are limited primarily to checking the connections and cleaning of the exterior of the product if contaminated.

9. Cleaning

WARNING

Electric shock

Perform cleaning work only on products that have been de-energized and depressurized.
Do not touch cables or electrical components with wet or moist hands.
Use steam-jet equipment or high-pressure cleaners only in accordance with the IP enclosure rating of the pump. Otherwise, electrical components may be damaged.
Cleaning, required personal protective gear, cleaning agents, and equipment are in accordance with the current operating rules of the operator.

9.1 Cleaning agents

Only cleaning agents compatible with the materials can be used for cleaning (see Section 2.3 for materials).

Always completely remove residue of the cleaning agent on the product and rinse with clear water. This prevents the formation of alkaline deposits.

9.2 Exterior cleaning

- Mark and secure wet areas
- Unauthorized persons must be kept away
- Thoroughly clean all external surfaces with a moist cloth

9.3 Interior cleaning

The interior normally does not need to be cleaned.
The interior of the product must be cleaned if incorrect or contaminated lubricant is accidentally filled.

Please contact SKF Customer Service.

9.4 Cleaning sensors

If the active sensor surface becomes contaminated, it must be cleaned with a cloth.

10. Maintenance

Careful and regular maintenance is required in order to detect and remedy possible faults in time.
The specific intervals must always be determined by the operator according to the operating conditions and regularly reviewed and adapted where necessary. If necessary, copy the table for regular maintenance activities.

Maintenance checklist

Activity to be performed	YES	NO
Electrical connection of the inductive proximity switch / directional solenoid valve established correctly	☐	☐
Mechanical connection established correctly	☐	☐
The performance characteristics for the aforementioned connections match the specifications in "Technical data"	☐	☐
All components such as lubrication lines and metering devices are correctly installed	☐	☐
No apparent damage, contamination, or corrosion	☐	☐
Any dismantled protective and monitoring equipment is fully reinstalled and functional	☐	☐
No unusual noises, vibrations, moisture accumulation, odors present	☐	☐
No undesired discharge of lubricant at connections	☐	☐
Lubricant is fed without bubbles	☐	☐
The bearings and friction points requiring lubrication receive the planned lubricant volume	☐	☐
Check that equipotential bonding is fully present, properly connected, and electrically continuous	☐	☐
No accumulated dust present	☐	☐

11. Malfunctions, causes, and remedies



WARNING

System pressure
Lubrication systems are pressurized during operation. Lubrication systems must therefore be depressurized before starting assembly, maintenance or repair work, or any system modifications or system repairs.

IMPORTANT NOTE

Outlets of a progressive metering device that are not needed must not be closed because this will cause the metering device to jam.
Consolidate unneeded outlets with a neighboring outlet or connect them to the pump via the return line.

11.1 Prior to beginning troubleshooting

The only condition that can cause a properly configured progressive metering device to jam/clog is the entry of contaminants into the lubricant lines or an insufficient quantity of lubricant.
Preventing contaminants from entering during work or when refilling the lubricant reservoir first and foremost requires a clean work environment.
The progressive metering device outlet is typically equipped with a screw union with check valve. Do not replace this with another connector because this may cause problems in the progressive metering device's operation.
Each outlet of the progressive metering device can supply each bearing/each secondary metering device with a different, precalculated quantity of grease. Therefore, the position of each lubricant line to the progressive metering device outlet should be noted prior to starting work.

11.2 Metering device and system malfunctions

Malfunctions table

Malfunction	Cause	Remedy
No lubricant supply	o Insufficient system pressure at metering device inlet	• Check the system pressure at the metering device inlet, increase system pressure if necessary
	o Metering device jam o Contamination	• Trigger interim lubrication and release the outlet screw unions in sequence as seen from the metering device inlet. The metering device is working correctly if lubricant can be clearly seen discharging from all outlets. ***On the metering device:*** ***If enough lubricant is discharged:*** • Check downstream lubrication lines for clogging, pinching, hardened grease, or twisting of the bearing shell. ***If not enough lubricant is discharged:*** • Check the feed rate ***If no lubricant is discharged:*** • Switch off the progressive system and relieve pressure. Then loosen and remove both plug screws on the left and right of the metering device module in sequence as seen from the metering device inlet. Use a suitable arbor to check that the metering device piston runs smoothly. If the metering device piston moves smoothly, reinstall both plug screws and then perform the same procedure on the next module.

(Continued on the next page)

Malfunction	Cause	Remedy
No lubricant supply	o Metering device jam o Contamination	• If the metering device piston moves sluggishly, replace the corresponding module (see Chapter 6.11).
No lubricant at the lubrication points	o Defective or blocked feed line	• Detach feed line, identify cause of blockage, replace secondary feed line if necessary

Lubricant discharge is too low	o Air cushion in main metering device or secondary metering device	• Perform venting on the affected metering device
		  • Grease progressive system - see Chapter 7.1
		  • Oil progressive system - see Chapter 7.2.

No lubricant at lubrication points	o Damaged lubricant line, detectable only by visual inspection and significant lubricant discharge. o Pinching and sharp bends are blocking the grease flow	• Replace the lubricant line • For grease progressive systems, use only original SKF replacement lines that have already been completely filled. Perform start-up and functional inspection • Perform visual inspection for mechanical damage, correct if necessary
	o Lubricant supply is too low	• Check grease supply in the lubricant reservoir, refill if necessary • Start-up, functional inspection • Trigger interim lubrication

(Continued on the next page)

Malfunction	Cause	Remedy
No lubricant at lubrication points	o Defective lubrication point o Defective bearing o Bearing bush twisted	• Check bearing for mechanical damage or contamination • Check bearing for proper function (move the machine and check for bearing noise) • Use a high-pressure grease gun to make the bearing move freely • If this is not possible, the bearing must be repaired or replaced by technical personnel • Install all lines and screw unions that were removed during troubleshooting • Perform start-up and functional inspection
System malfunction	o Inductive proximity switch on the main metering device has indicated that the system is not working.	• Loosen both lubrication lines on the last metering section of the main metering device, switch on the lubrication system, and check whether lubricant discharges without bubbles. If lubricant discharges without bubbles, tighten both lubrication lines and repeat the procedure on all secondary metering devices, starting from the closest metering device. Vent the possibly defective metering device again; replace in the event of recurrence • If all progressive metering devices function properly, check the electrical connection of the inductive proximity switch for proper function
No pressure build up in the main line	o Pressure relief valve does not close o Unsuitable lubricant (see technical data) o Fill level too low o Pump element is defective	• Clean or replace the pressure relief valve • Only use original SKF spare parts • Remove lubricant from entire system and dispose of lubricant in the proper manner; fill system with suitable lubricant • Top up lubricant • Inspect pump element and replace if necessary

12. Repairs

12.1 General notes

WARNING

Risk of injury

At a minimum, the following safety measures must be taken before any repairs:

- Unauthorized persons must be kept away
- Mark and secure the work area
- Depressurize the product
- Unlock the product and prevent it from being restarted
- Cover any live parts in the surrounding area

DANGER

Explosion

Prior to replacing an inductive proximity switch, all safety-related ATEX rules and certificates must be present and maintained. It must be ensured (checked) that no potentially explosive atmosphere is present.

DANGER

Explosion hazard from non-ATEX-compliant attachments and monitoring equipment.

Only attachments and monitoring equipment approved by SKF for the ATEX progressive metering devices may be installed.

12.2 Replace inductive proximity switch

-see Figure 34

- Check that the new inductive proximity switch (**2**) matches the documentation and the intended use
- Disconnect cable end (**1**) of the defective proximity switch (**2**) from the customer's terminal strip
- Loosen locknuts ((2x (**3**)) from the sensor holder (**4**)
- Unscrew defective proximity switch (**2**) from the sensor holder (**4**)
- Apply new proximity switch (**2**) to the sensor holder (**4**) and screw in gently
- Disconnect cable end (**1**) of the sensor (**2**) on the customer's terminal strip
- Apply pressure to metering device until the plunger rod (**5**) has extended
- Turn on customer's power supply then screw the proximity switch (**2**) into the sensor holder (**4**) until a sensor pulse is present on the customer's control unit

Sensor switching clearance to the plunger rod:

Sensor	Nominal sensing distance approx. **[mm]**
24-1884-2288	4.0
24-1884-2292	8.0
24-1884-2613	1.5

- Secure the proximity switch (**2**) to the sensor holder (**4**) using the two locknuts (**3**)
- Inspections pursuant to the requirements of the ATEX Directive

Fig. 34 **Replace inductive proximity switch**

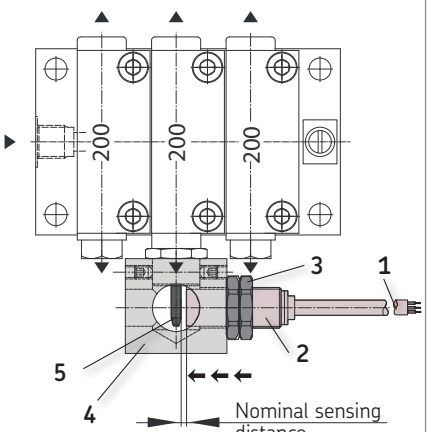

13. Shutdown, disposal

13.1 Temporary shutdown

Temporary shutdown is performed by:

Switching off the main machine

Disconnecting the product's power supply

13.2 Permanent shutdown, disassembly

Permanent shutdown and disassembly of the product must be planned properly by the operator and conducted in compliance with all applicable requirements.

13.3 Disposal

Countries within the European Union
Waste should be avoided or minimized to the extent possible. The disposal of products contaminated with lubricant must be performed by a recognized waste disposal company in compliance with environmental protection requirements and waste disposal regulations as well as the requirements of local authorities.

The producer of waste is responsible for its specific classification, as the European Waste Catalog provides for different disposal keys for waste that is the same but of different origin.

Dispose of or recycle electrical components in accordance with WEEE Directive 2012/19/EU.



Plastic or metallic parts can be disposed of as industrial waste.



Countries outside the European Union

Disposal is carried out according to the applicable laws and regulations of the country.

14. Spare parts

Progressive metering device spare parts, Fig. 40

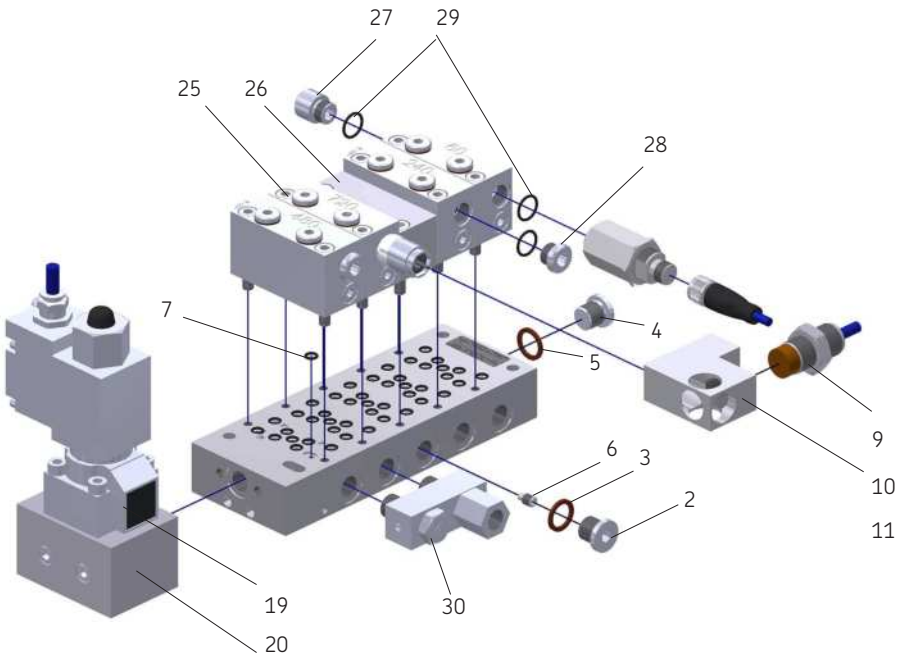

Spare parts table 1

Item	Designation	Number of modules	PSG1 Inlet Outlet	PSG1 Order No.	PSG2 Inlet Outlet	PSG2 Order No.	PSG2 Corrosion-resistant [1] Order No.	PSG3 Inlet Outlet	PSG3 Order No.	PSG3 Corrosion-resistant [1] Order No.
	Baseplate									
2	Plug screw for baseplate outlet			466-419-001 (incl. washer)		DIN908-R1-4-5.8	99-0014-0908		DIN908-R1-4-5.8	99-0014-0908
3	Washer for plug screw item 2			–		508-108	99-1423-7603		508-108	99-1423-7603
4	Plug screw for measurement connector			–		DIN908-R1-4-5.8	99-0014-0908		DIN908-G3-8A-5.8	44-821-2917
5	Washer for plug screw item 4			–		508-108	99-1423-7603		DIN7603-A17×21-CU	99-1823-7603
6	Setscrew for metering device baseplate			DIN915-AM5×8-45H		95-0610-0915	95-0610-0915		95-0810-0915	95-0810-0915
7	O-ring on baseplate			WVN532-3.5×1.5 (7 pieces/module)		WVN532-3.5×1.5 (9 pieces/module)			96-9026-0062 (9 pieces/module)	

Spare parts table 2

Metering module		PSG1		PSG2		PSG3	
Item	Designation	Volumetric flow per cycle and outlet [mm³]	Order No.	Volumetric flow per cycle and outlet [mm³]	Order No.	Volumetric flow per cycle and outlet [mm³]	Order No.
25	Metering device module (metering module) complete with plunger rod on right [1] (attach from the second to the next-to-last module)	200 250	24-2151-4664 24-2151-4665	120 240 360 480 600 720 840	24-2151-4230 24-2151-4231 24-2151-4232 24-2151-4233 24-2151-4234 24-2151-4300 24-2151-4301	800 1200 1600 2400 3200	24-2151-4250 24-2151-4258 24-2151-4251 24-2151-4252 24-2151-4253
26	Complete dummy module without plug screw for baseplate		24-2151-4595		24-2151-4210		24-2151-4211
27	Piston stop screw, pin side		VPKM.18		44-1855-2144		44-1855-2106
28	Piston stop screw, opposite pin side		VPJ.14		44-1855-2143		44-1855-2106
29	Washer for item 27, 28, 8		96-9120-0062		WVN532-12×1.5		44-0411-2046 (only for item 8)

1) Metering device module (metering module) with cycle indicator is supplied in the "Plunger rod right" version.

Spare parts table 3

Monitoring

Item	Designation	PSG1 Order No.	PSG2 Order No.	PSG3 Order No.
9	Proximity switch	24-1884-2288	24-1884-2292 24-1884-2613	24-1884-2292
10	Housing for proximity switch 24-1884-2288	VPKM.13	-	-
	Housing for proximity switch 24-1884-2292		44-0711-2592	44-0711-2593
11	Setscrew for housing	DIN914-M4×6-45H (2 pieces/holder)	–	–

Attachments

19	2/2-directional solenoid valve	-	**24-1254-2500**	**–**
20	Assoc. Housing	-	**24-1883-2241**	**–**

Spare parts table 4

Inlet screw union

Item	Designation	PSG1 Inlet	PSG1 Order No.	PSG2 Inlet	PSG2 Order No.	PSG3 Inlet	PSG3 Order No.
23	Pipe ø6 mm	G1/8	406-403W	G1/4	96-0204-0058-E0	G3/8	–
	Pipe ø8 mm	G1/8	408-423W	G1/4	96-0208-0058-E0	G3/8	96-0209-0058-E0
	Pipe ø10 mm	G1/8	410-443W	G1/4	96-0210-0058-E0	G3/8	96-0211-0058-E0
	Pipe ø12 mm	G1/8	–	G1/4	96-0213-0058-E0	G3/8	96-0212-0058-E0
	Pipe ø15 mm	G1/8	–	G1/4	–	G3/8	96-0217-0058-E0
	Pipe ø16 mm	G1/8	–	G1/4	–	G3/8	96-1117-0058-E0

Outlet port screw

Item	Designation	PSG1 Outlet	PSG1 Order No.	PSG2 Outlet	PSG2 Order No.	PSG3 Outlet	PSG3 Order No.
31	Pipe ø6 mm, without check valve		–	G1/4	96-1106-0058-E0	G1/4	96-1106-0058-E0
	Pipe ø8 mm, without check valve		–	G1/4	96-0208-0058-E0	G1/4	96-0208-0058-E0
	Pipe ø10 mm, without check valve		–	G1/4	96-0210-0058-E0	G1/4	96-0210-0058-E0
	Pipe ø12 mm, without check valve		–	G1/4	96-0213-0058-E0	G1/4	96-0213-0058-E0
	Pipe ø4 mm, with check valve	G1/8	24-2103-2933		–		–
	Pipe ø6 mm, with check valve	G1/8	24-2103-2927	G1/4	96-9606-0058-E0	G1/4	96-9606-0058-E0
	Pipe ø8 mm, with check valve		–	G1/4	96-9008-0058-E0	G1/4	96-9008-0058-E0
	Pipe ø10 mm, with check valve		–	G1/4	96-9010-0058-E0	G1/4	96-9010-0058-E0

Spare parts table 5

Bridges (crossporting) [1)]

Item	Designation	PSG1 Outlet	PSG1 Order No.	PSG2 Outlet	PSG2 Order No.	PSG3 Outlet	PSG3 Order No.
30	without outlet and without check valve						
	2-bridge	G1/8	24-2151-3760	G1/4	24-2151-3730	G1/4	24-2151-3734
	3-bridge		24-2151-3761		24-2151-3731		24-2151-3735
	with outlet and without check valve						
	2-bridge	G1/8	24-2151-3762	G1/4	24-2151-3732	G1/4	24-2151-3736
	3-bridge		24-2151-3763		24-2151-3733		24-2151-3737
	with outlet and with check valve						
	2-bridge		24-2151-3764		24-2151-3394		24-2151-3396
	3-bridge	G1/8	24-2151-3765	G1/4	24-2151-3395	G1/4	24-2151-3738
	4-bridge		–		24-2151-3739		On request
	without outlet and with check valve						
	3-bridge	G1/8	–	G1/4	24-2151-3397	G1/4	24-2151-3393
	2-bridge		–		24-2151-3390		24-2151-3392

1) The bridges listed are approved only for a maximum operating pressure of 100 bar.

15. Accessories

PSG accessories

Designation	Order No.	Weight [g]
Cable sockets M12x1, 2-pin design, NAMUR V1-G-N-M-PUR		
Circular connector, straight, with 5-m integrally extruded cable, **NAMUR V1-G-N-5M-PUR**	**24-1882-5005**	178
Circular connector, straight, with 10-m integrally extruded cable, **NAMUR V1-G-N-10M-PUR**	**24-1882-5010**	325
Circular connector, straight, with 15 m integrally extruded cable, **NAMUR V1-G-N-15M-PUR**	**24-1882-5015**	488

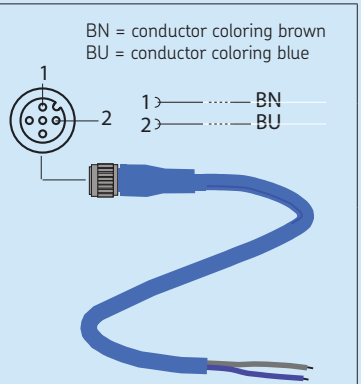

PSG2/PSG3 accessories

Pressure gauge and screw union PSG2 / PSG3

Designation	Order No.
Pressure gauge 160 bar	**24-1207-2158**
Straight threaded socket	**95-5080-3901**
Pressure gauge	**96-0308-0060**
Reduction fitting for PSG3	**96-3120-0058**

24-1207-2158

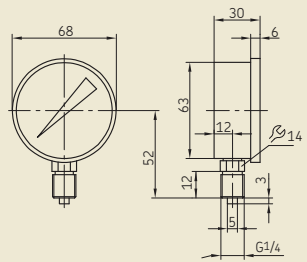

95-5080-3901

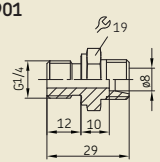

96-0308-0060

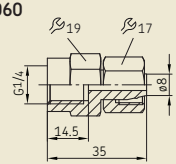

PSG2/PSG3 accessories

Measurement connection and screw union PSG2 / PSG3

Designation	Order No.
Measurement connector	**24-2105-2405**
Measurement connector screw union	
for PSG2 - G1/4, WAF 19	**24-2151-4115**
for PSG3 - G3/8, WAF 22	**24-2151-4116**

24-2105-2405

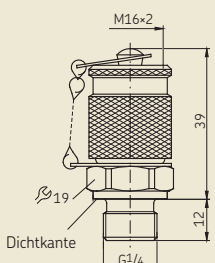

24-2151-4115, 24-2151-4116

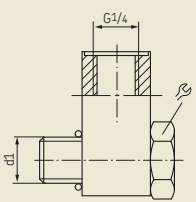

16. Declarations of Conformity

16.1 Inductive proximity switch
24-1884-2288

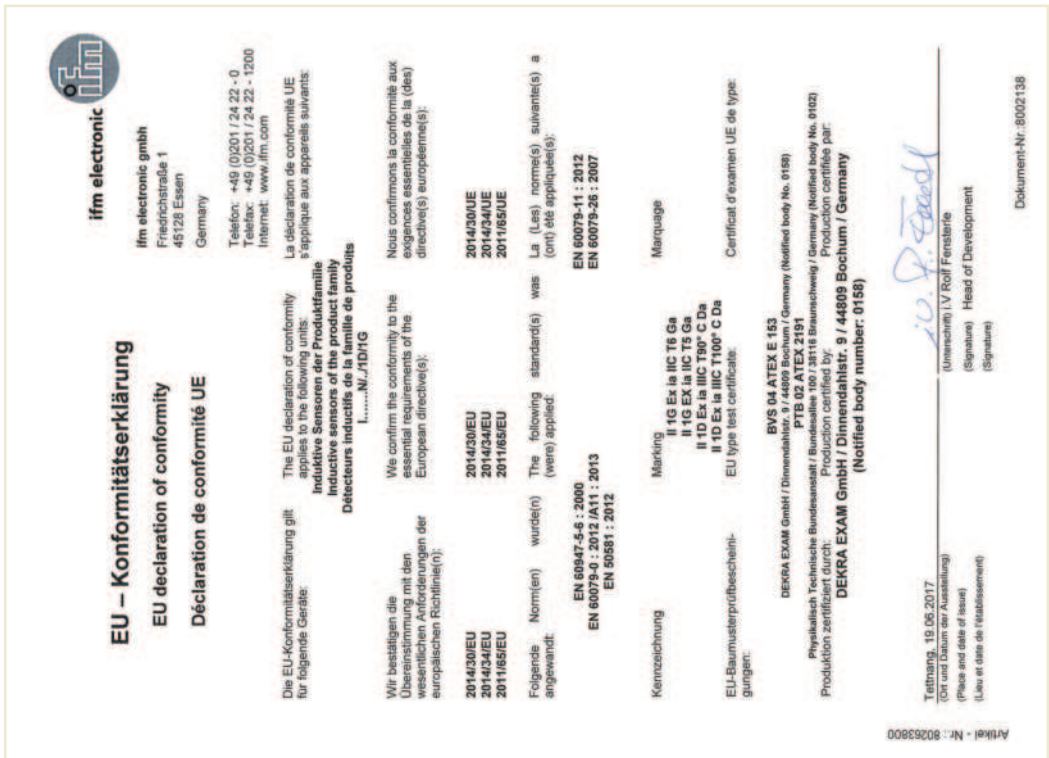

ifm electronic

EU – Konformitätserklärung

EU declaration of conformity

Déclaration de conformité UE

ifm electronic gmbh
Friedrichstraße 1
45128 Essen
Germany

Telefon: +49 (0)201 / 24 22 - 0
Telefax: +49 (0)201 / 24 22 - 1200
Internet: www.ifm.com

Die EU-Konformitätserklärung gilt für folgende Geräte:

The EU declaration of conformity applies to the following units:

La déclaration de conformité UE s'applique aux appareils suivants:

Induktive Sensoren der Produktfamilie
Inductive sensors of the product family
Détecteurs inductifs de la famille de produits
I.....N/.../1D/1G

Wir bestätigen die Übereinstimmung mit den wesentlichen Anforderungen der europäischen Richtlinie(n):

We confirm the conformity to the essential requirements of the European directive(s):

Nous confirmons la conformité aux exigences essentielles de la (des) directive(s) européenne(s):

2014/30/EU
2014/34/EU
2011/65/EU

Folgende Norm(en) wurde(n) angewandt:

The following standard(s) was (were) applied:

La (Les) norme(s) suivante(s) a (ont) été appliquée(s):

EN 60947-5-6 : 2000
EN 60079-0 : 2012 /A11 : 2013
EN 60581 : 2012

EN 60079-11 : 2012
EN 60079-26 : 2007

Kennzeichnung

Marking

Marquage

II 1G Ex ia IIC T6 Ga
II 1G EX ia IIC T5 Ga
II 1D Ex ia IIIC T90° C Da
II 1D Ex ia IIIC T100° C Da

EU-Baumusterprüfbescheinigungen:

EU type test certificate:

Certificat d'examen UE de type:

BVS 04 ATEX E 153
DEKRA EXAM GmbH / Dinnendahlstr. 9 / 44809 Bochum / Germany (Notified body No. 0158)
PTB 02 ATEX 2191
Physikalisch Technische Bundesanstalt / Bundesallee 100 / 38116 Braunschweig / Germany (Notified body No. 0102)

Produktion zertifiziert durch:

Production certified by:

Production certifiée par:

DEKRA EXAM GmbH / Dinnendahlstr. 9 / 44809 Bochum / Germany
(Notified body number: 0158)

Tettnang, 19.06.2017
(Ort und Datum der Ausstellung)
(Place and date of issue)
(Lieu et date de l'établissement)

(Unterschrift) i.V. Rolf Fensterle
(Signature) Head of Development
(Signature)

Dokument-Nr. 80026800

Artikel - Nr.: 80263800

16.2 Inductive proximity switch
24-1884-2292



ifm electronic

EU – Konformitätserklärung

EU declaration of conformity

Déclaration de conformité UE

ifm electronic gmbh
Friedrichstraße 1
45128 Essen
Germany

Telefon: +49 (0)201 / 24 22 - 0
Telefax: +49 (0)201 / 24 22 - 1200
Internet: www.ifm.com

Die EU-Konformitätserklärung gilt für folgende Geräte:

The EU declaration of conformity applies to the following units:

Induktive Sensoren der Produktfamilie
Inductive sensors of the product family
Détecteurs inductifs de la famille de produits
I.....NJ../TD/2G

La déclaration de conformité UE s'applique aux appareils suivants:

Wir bestätigen die Übereinstimmung mit den wesentlichen Anforderungen der europäischen Richtlinie(n):

We confirm the conformity to the essential requirements of the European directive(s):

Nous confirmons la conformité aux exigences essentielles de la (des) directive(s) européenne(s):

2014/30/EU
2014/34/EU
2011/65/EU

Folgende Norm(en) wurde(n) angewandt:

The following standard(s) was (were) applied:

La (Les) norme(s) suivante(s) a (ont) été appliquée(s):

EN 60947-5-6 : 2000
EN 50581 : 2012

EN 60079-0 : 2012 /A11 : 2013
EN 60079-11 : 2012

Kennzeichnung

Marking

Marquage

II 1G Ex ia IIB T6 Ga
II 2G EX ia IIC T6 Gb
II 1D Ex ia IIIC T90°C Da

EU-Baumusterprüfbescheinigungen:

EU type test certificate:

Certificat d'examen UE de type:

BVS 04 ATEX E 153
DEKRA EXAM GmbH / Dinnendahlstr. 9 / 44809 Bochum / Germany (Notified body No. 0158)
PTB 01 ATEX 2191
Physikalisch Technische Bundesanstalt / Bundesallee 100 / 38116 Braunschweig / Germany (Notified body No. 0102)

Produktion zertifiziert durch:

Production certified by:

Production certifiée par:

DEKRA EXAM GmbH / Dinnendahlstr. 9 / 44809 Bochum / Germany
(Notified body number: 0158)

Tettnang, 03.07.2017
(Ort und Datum der Ausstellung)
(Place and date of issue)
(Lieu et date de l'établissement)

(Unterschrift) I.V. Rolf Fensterle
(Signature) Head of Development
(Signature)

Dokument-Nr.: 8002078

Artikel - Nr.: 80263798

16.3 Inductive proximity switch
24-1884-2613

EU-Declaration of conformity
EU-Konformitätserklärung

en/de

Pepperl+Fuchs GmbH
Lilienthalstraße 200
68307 Mannheim
Germany
Phone +49 621 776-0
Fax +49 621 776-1000

No. / *Nr.*: DOC-1190
Date / *Datum*: 2016-09-29

Copyright Pepperl+Fuchs
www.pepperl-fuchs.com

PEPPERL+FUCHS

Declaration of conformity / *Konformitätserklärung*

We, Pepperl+Fuchs GmbH declare under our sole responsibility that the products listed below are in conformity with the listed **European Directives and standards**.
Die Pepperl+Fuchs GmbH erklärt hiermit in alleiniger Verantwortung, dass die unten gelisteten Produkte den genannten Europäischen Richtlinien und Normen entsprechen.

Products / *Produkte*

Product / *Produkt*	Item number	Description / *Beschreibung*
NJ1.5-18GM-N-D	106342	inductive sensor
NJ1.5-18GM-N-D-10M	106343	inductive sensor
NJ1.5-18GM-N-D-V1	106344	inductive sensor

Directives and Standards / *Richtlinien und Normen*

EU-Directive / *EU-Richtlinie*	Standards / *Normen*
ATEX 2014/34/EU (L96/309 356)	EN 60079-0/A11:2013-11 EN 60079-0:2012-06 EN 60079-11:2012-01
EMC 2014/30/EU (L96/79 106)	EN 60947-5-2/A1:2012-11 EN 60947-5-2:2007-12

Affixed CE Marking / *Angebrachte CE-Kennzeichnung*

CE 0102

Signatures / *Unterschriften*

Mannheim, 2016-09-29

ppa. Wolfgang Hehn
Director Business Unit Sensors

i.V. Tobias Dittmer
Global Product Manager

ANNEX ATEX
Notified Body QM-System / *Notifizierte Stelle des QM-Systems*
Physikalisch Technische Bundesanstalt (0102)
Bundesallee 100
38116 Braunschweig
Germany

Marking and Certificates / *Kennzeichnung und Zertifikate*

Marking / *Kennzeichnung*	Certificate / *Zertifikat*	Issuer ID / *Aussteller ID*
Ex II 1 D Ex II 2 G	PTB 05 ATEX 2048 X	0102

Key for Issuer ID / *Schlüssel zur Ausstellter ID*

ID	Issuer / *Aussteller*
0102	Physikalisch Technische Bundesanstalt Bundesallee 100 38116 Braunschweig Germany

DOC-1190 / 2016-09-29

1/1

13 EU-Konformitätserklärung

SCHIENLE
MAGNETTECHNIK

Hiermit erklärt der Hersteller,

Schienle Magnettechnik und Elektronik GmbH
In Oberwiesen 3
88682 Salem – Neufrach

dass das folgende Produkt

Bezeichnung:	Druckfest gekapselter Einfachhubmag net
Typ :	01 EX14 037x yzzz
EU-Baumusterprüfbescheinigung:	FM 13 ATEX 0071X
Kennzeichnung:	Ex 2G Ex db IIB+H2 T4 Gb Ex 2D Ex tb IIIC T135℃ Db

mit der Richtlinie 2014/34/EU übereinstimmt und nac h folgenden harmonisierten Normen entwickelt, konstruiert und gefertigt wurde:

EN 60079-0:2012+A11:2013 : Explosionsgefährdete Bereiche - Teil 0: Betriebsmit tel - Allgemeine Anforderungen (IEC 60079-0:2011, modifiziert + Cor. :2012 + Cor.:2013)

EN 60079-1:2014 : Explosionsgefährdete Bereiche - Teil 1: Gerätesch utz durch druckfeste Kapselung "d" (IEC 60079-1:2014); Deutsche Fassung EN 60079-1 :2014

EN 60079-31:2014 Explosionsgefährdete Bereiche - Teil 31: Geräte-St aubexplosionsschutz durch Gehäuse "t" (IEC 60079-31:2013);

Salem-Neufrach
Ort

20.04.2016
Datum

Ex-Beauftragter

SCHIENLE MAGNETTECHNIK
Fon49 (0) 7553-8268 60
Fax 49 (0) 7553-8268 61
www.schienle.de

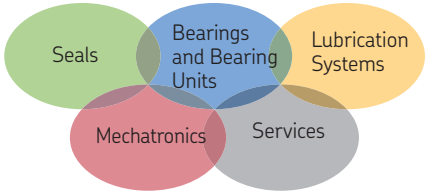

The Power of Knowledge Engineering

Over the course of more than a century, SKF has specialized in five fields of competence and acquired a wide range of application expertise. We utilize this experience to provide innovative solutions to OEMs and other manufacturers in practically all industrial sectors worldwide.

Our five fields of competence are: Bearings and bearing units, seals, lubrication systems, mechatronics (combining mechanical and electronic components to improve the capability of classic systems), and extensive services from 3-D computer simulations and modern condition monitoring systems for high reliability to system management. SKF is a leading global company and guarantees its customers uniform quality standards and global product availability.

951-180-085-EN
October 2019
Version 01

SKF Lubrication Systems Germany GmbH
Walldorf Plant
Heinrich-Hertz-Str. 2-8
69190 Walldorf
Germany
Tel: +49 (0) 6227 33-0
Fax: +49 (0) 6227 33-259
E-mail: Lubrication-germany@skf.com
www.skf.com/lubrication

LINCOLN

SKF