SKF

INDUSTRIAL CHAIN LUBRICATION SOLUTIONS

Automate your chain lubrication
to increase chain service lifes and to
reduce downtime in process industries

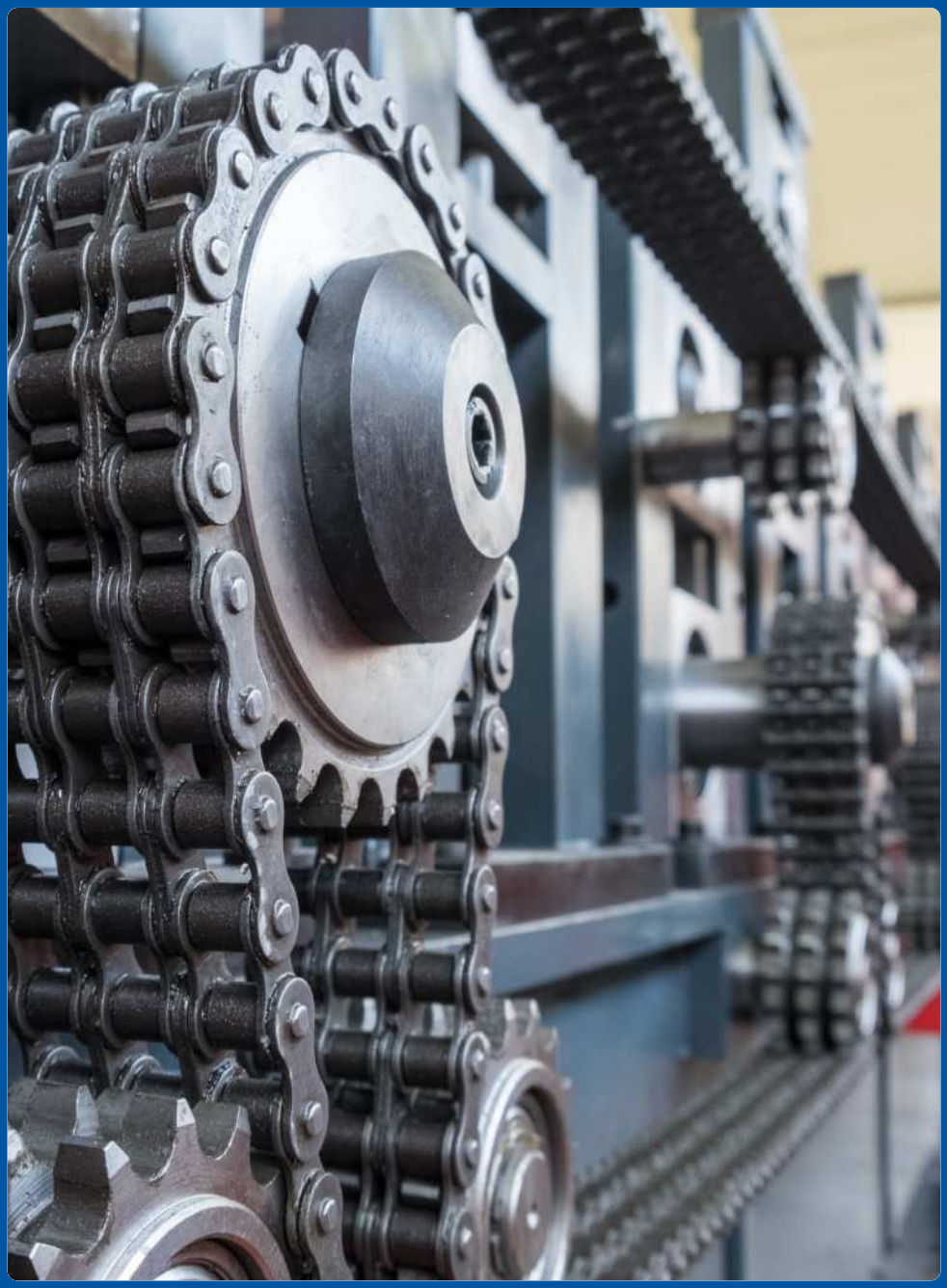

LINCOLN

Would you like to discover SKF chains?

Transmission chains

Achieve dependable, efficient power transmission with a broad choice of ANSI, BS and engineered chains designed to keep your equipment running reliably in demanding applications.

Conveyor chains

Move, pull or elevate loads with confidence using a wide selection of roller, cast, welded-steel and application-specific conveyor chains built to perform in tough operating conditions.

Leaf chains

Lift and tension heavy loads safely and reliably with high-strength leaf chains designed for durable performance and built to meet key international standards.

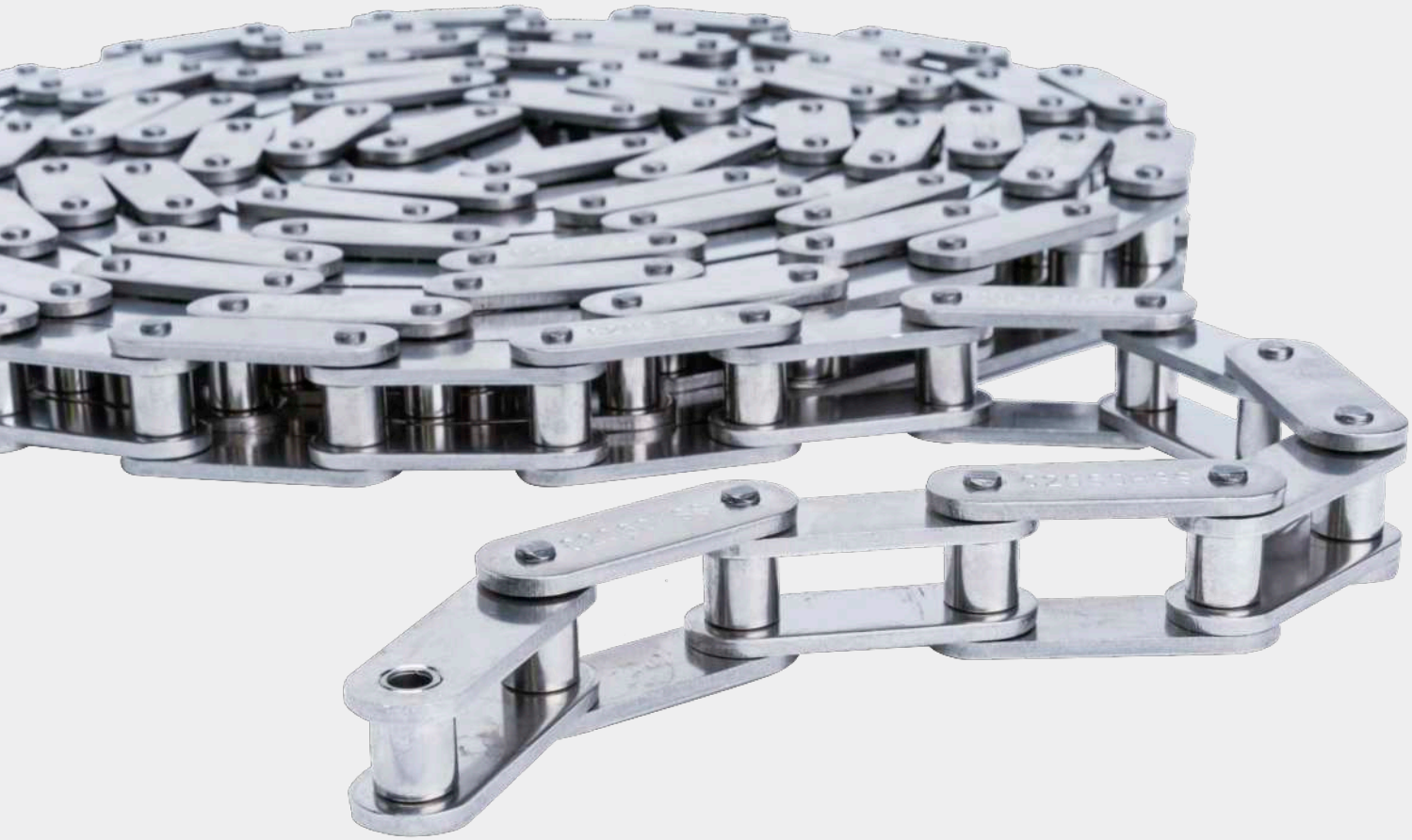



How to find the most suitable chain?

SKF chain calculation tool

- **Calculate chain designs with accuracy**
  to support confident engineering decisions.
- **Access clear, detailed technical reports**
  to understand performance and validate your choices.
- **Export your results easily**
  to PDF or Excel for sharing or documentation.
- **Discover complementary solutions**
  - such as tensioning or lubrication - directly from your bill of materials.
- **Work seamlessly online,**
  with no downloads or installation required.











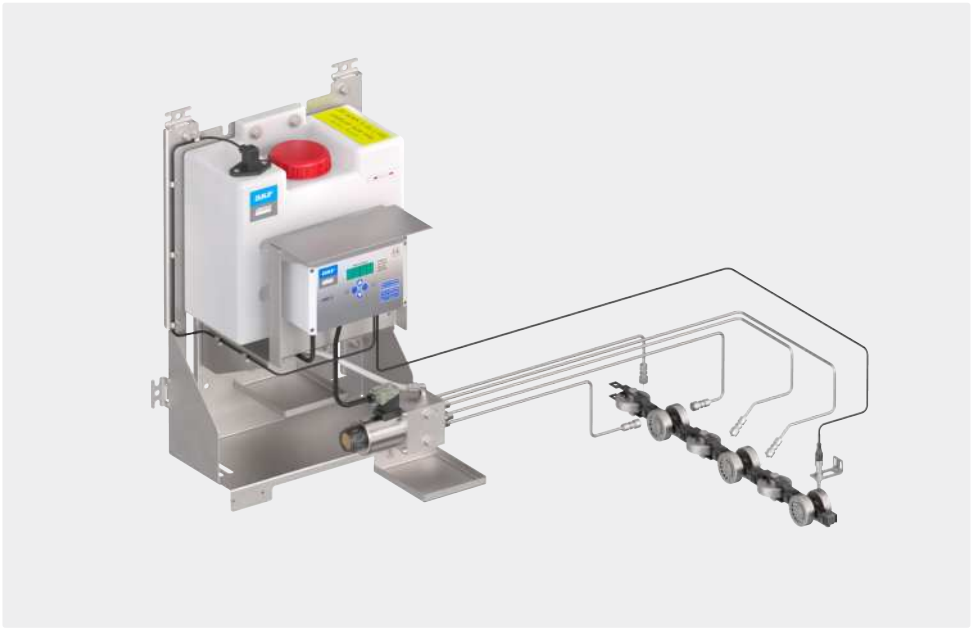





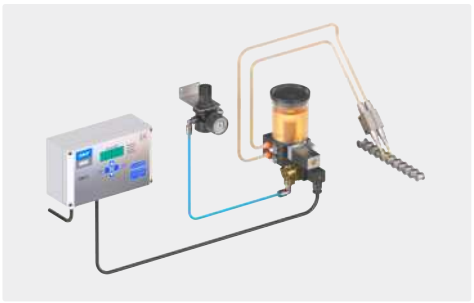

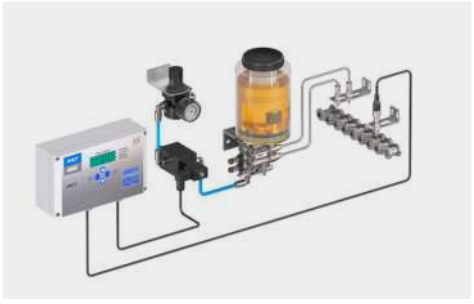



Table of contents

Introduction 7
Chain design 8
Chains types 9
Friction and wear 10
Chain elongation 11
Chain lubricants 12
Chain lubrication 13
Brush lubrication solutions 15
Chain lubrication LAPB 16
Chain lubrication kit OCL-M 18
Chain lubrication system CL-ACP 20
Chain lubrication system CL-MCU 22
Chain lubrication system CL-MKU 24
Chain lubrication system CL-MFE 26
Chain lubrication system CL-OS 28
Oil projection lubrication systems 31
Chain lubrication system CL-501 32
Chain lubrication kit CLK 34
Chain lubrication system PFC 36
Air assisted oil spraying (droplets) lubrication systems 39
Chain lubrication system CL-VE1B 40
Chain lubrication system CL-VTEC 42
Chain lubrication system ORSCO VSR 44
Chain lubrication system ORSCO Series 170 46
Grease injection lubrication systems 49
Chain lubrication system GIS-B (GVP) 50
Chain lubrication system GIS-C (Cobra) 52
Accessories 55
Brushes and supports 56
Nozzles and supports 58
Reservoirs 60
Plastic tubes 62
Fittings, metal pipes and fixing material 63
Controllers 64
Chain oils and oil handling containers 65
Index 66
Notes 69

Chain lubrication solution selection table

System	Lubricant	Viscosity	Lubricant application	Roller chains	Egineered chains	Number of chains	Chain speed	Pitch max.[1]	Operating temperature pump unit		Brush/nozzle/felt [2]	
								mm	°C	°F	°C	°F
LAPB	oil	up to 2 000 mm²/s	brush	•	–	1	max. 1 m/s	≤50	–20 to +60	*–4 to 140*	max. 60	*max. 140*
OCL-M	oil	32 to 2 000 mm²/s	brush	•	–	1–6	max. 1 m/s	≤50	0 to +70	*32 to 158*	0 to 70	*32 to 158*
CL-ACP	oil	20 to 1 500 mm²/s	brush	•	–	1–12	max. 1 m/s	≤50	0 to +80	*32 to 176*	0 to 70	*32 to 158*
CL-MCU	oil	20 to 1 500 mm²/s	brush	•	–	1–20	max. 1 m/s	≤50	10 to 40	*50 to 104*	0 to 70	*32 to 158*
CL-MKU	oil	20 to 1 500 mm²/s	brush	•	–	1–30	max. 1 m/s	≤50	10 to 40	*50 to 104*	0 to 70	*32 to 158*
CL-MFE	oil	20 to 2 000 mm²/s	brush	•	–	1–100	max. 1 m/s	≤50	10 to 40	*50 to 104*	0 to 70	*32 to 158*
CL-OS	oil	20 to 2 000 mm²/s	felt	•	•	1–100	no limitation	no limit.	10 to 50	*50 to 122*	0 to 60	*32 to 140*
CL-VE1B	oil	10 to 400 mm²/s	spray	•	•	1–2	no limitation	50–250	10 to 50	*50 to 122*	0 to 60	*32 to 140*
CL-VTEC	oil	10 to 400 mm²/s	spray	•	•	1–6	no limitation	50–250	10 to 50	*50 to 122*	0 to 60	*32 to 140*
VSR [2]	oil	20 to 400 mm²/s	spray	•	•	1–8	no limitation	no limit.	–30 to 50	*–20 to 122*	–20 to 150	*–15 to 300*
Series 170 [2]	oil	20 to 400 mm²/s	spray	•	•	1–8	no limitation	no limit.	–30 to 50	*–20 to 122*	–20 to 150	*–15 to 300*
CL-501	oil	10 to 220 mm²/s	projection	•	–	1–4	max. 7 links/s	50–250	–10 to +55	*14 to 131*	max. 200	*max. 392*
CLK	oil	up to 220 mm²/s	projection	•	–	1–2	max. 7 links/s	50–250	0 to +60	*32 to 140*	max. 200	*max. 392*
PFC	oil	20 to 1 000 mm²/s	projection	•	•	1	max. 7 links/s	50–250	–20 to 60	*–4 to 140*	max. 200	*max. 392*
GIS-B	grease	up to NLGI 2	injection	–	•	1–2	max. 0.5 links/s	>80	5 to 60	*40 to140*	5 to 60	*40 to 158*
GIS-C	grease	up to NLGI 2	injection	–	•	1–2	max. 0.5 links/s	>80	5 to 60	*40 to140*	5 to 60	*40 to 158*

1) Indicative value only as a general guidance, may differ depending on application. Max. temperature for selected 'standard' brushes and nozzles, for alternate brushes, please see page 56
2) Lincoln ORSCO Series 170 and VSR models are not CE-approved and may only be used outside the EU.


SKF
40

Introduction

To understand chain lubrication, it helps to first take a look at the chains

Chains are critical components in countless industrial applications, transmitting power and motion with precision and reliability. Their performance, however, depends not only on robust design but also on proper lubrication. Without adequate lubrication, chains are susceptible to friction, wear, and premature failure - issues that can lead to costly downtime and reduced efficiency.

This catalogue provides a comprehensive overview of the fundamentals behind chain operation and lubrication. It explains the essential aspects of chain technology, including design and types, friction and wear mechanisms, chain elongation, and the role of lubricants and lubrication methods. Each topic is explored in detail to help you understand how these factors interact and influence chain performance.

By mastering these principles, you can ensure longer chain life, improved efficiency, and reduced maintenance costs. Dive into the following sections for detailed explanations, practical guidelines, and expert recommendations.



Chain design

- Dimensions
- Components

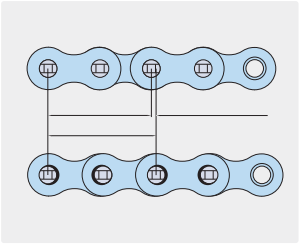

Chain elongation

- Reasons for elongation
- How to avoid it



Chain types

- Roller chains
- Duplex/Triplex chains
- Oil field chains
- Etc.



Chain lubricants

- Chain oils
- Chain greases

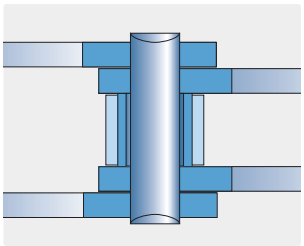

Friction and wear

- Friction points
- Wear of load rollers

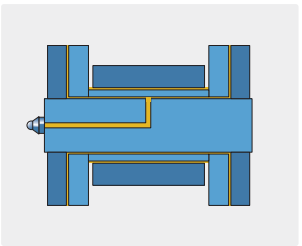

Chain lubrication

- Oil lubrication
- Grease lubrication

Chain design

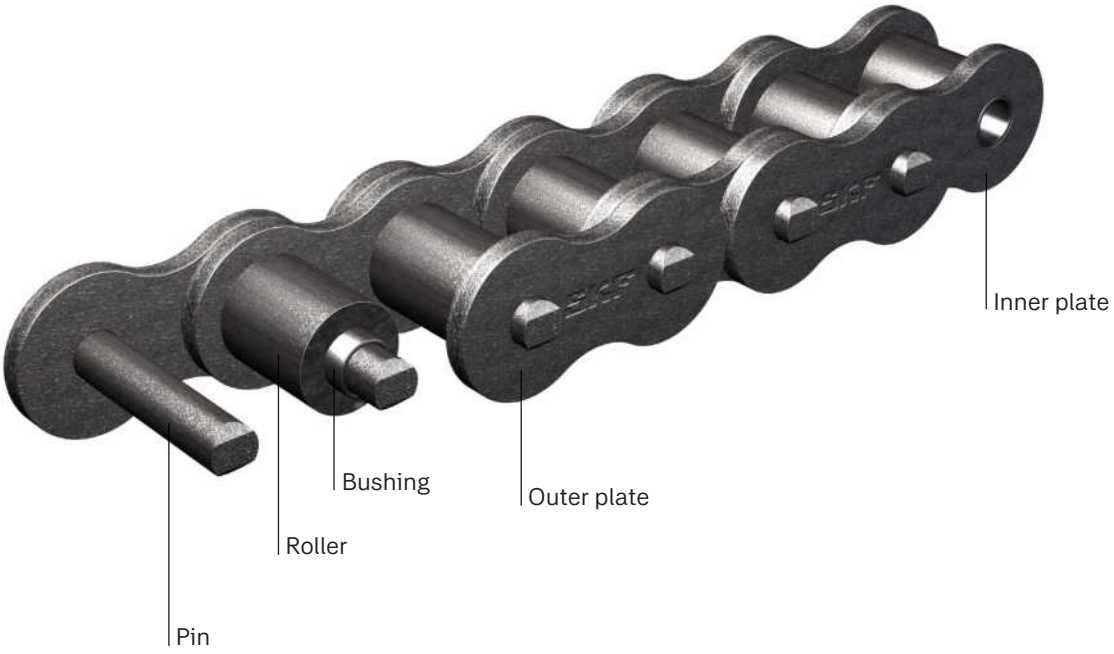

Chain components and chain dimensions

Industrial chains are typically composed of standard parts like pins for pivoting, bushings for load distribution, rollers for smooth sprocket engagement, and inner and outer plates for tensile strength and flexibility. Standard roller chains use all these components to ensure efficient power transmission and durability. Variants like leaf chains omit rollers and bushings, relying on stacked plates for high tensile strength in lifting applications, while silent chains replace rollers with toothed links for quiet, precise engagement at high speeds. These and further design differences optimize performance for specific requirements such as noise reduction, load capacity, or compactness.

Pitch, inner width, and roller diameter are key dimensions in chain design. Pitch refers to the distance between the centers of two consecutive pins, determining the chain's length and sprocket compatibility. Inner width is the space between the inner plates, which defines the size of the sprocket teeth and the fit for attachments. Roller diameter indicates the size of the rollers that engage with sprockets, influencing smoothness, wear resistance, and load distribution. Other important chain dimensions include pin diameter, which influences strength and wear resistance, and plate thickness and height, which determine tensile strength and fatigue performance. Additionally, the outer width over the pin and overall chain height are critical for clearance and space constraints in the application.

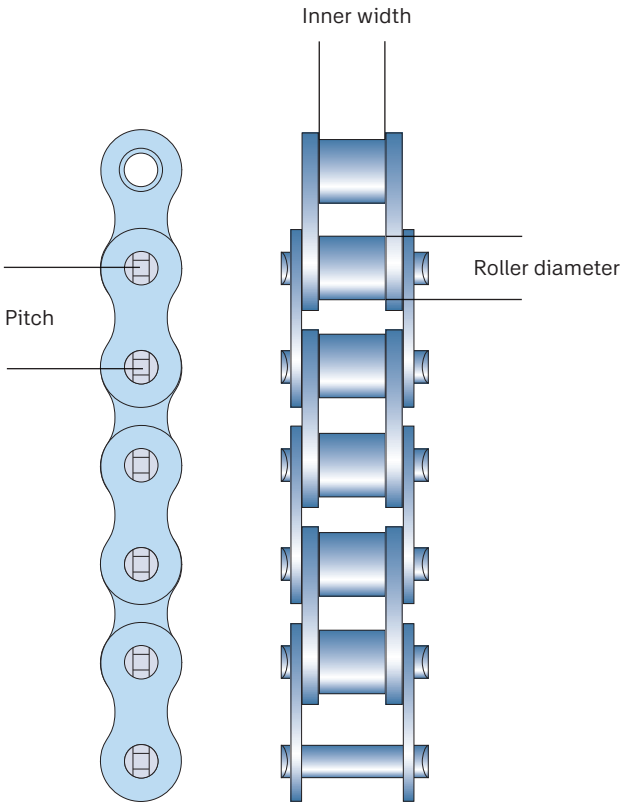

Chains types

Find chains on SKF.com



Roller chains

Roller chains are standardized, durable mechanical components used for precise, slip-free power transmission in industrial applications. They consist of interconnected rollers and links, offering high strength, wear resistance, and efficient operation even under heavy loads and harsh conditions.



Leaf chains

Leaf chains are high-strength steel chains for lifting and counterweight applications. Their interlaced plates and pins provide superior strength and flexibility. They resist fatigue, have a compact design, and show minimal elongation under heavy loads, making them ideal for material handling and forklifts.



Duplex and triplex roller chains

Duplex roller chains have two parallel link rows for higher load capacity and strength, suited for heavy-duty drives. Triplex chains add a third row, delivering maximum torque and durability for extreme conditions.



Double pitch chains

Double pitch chains are roller chains with link plates twice the pitch of standard chains for slower speeds and lighter loads. They use extended plates and oversized rollers for reduced weight, wear resistance, and smooth sprocket engagement.



Oil field chains

Oil field chains are heavy-duty roller chains built for harsh conditions, offering high tensile strength, wear and fatigue resistance under shock loads. Made from hardened alloy steel with corrosion protection, they meet API 7F standards for drilling rigs and mud pumps.



Engineered chains

Engineered chains are custom-designed for heavy-duty and specialized applications, delivering strength and durability beyond standard roller chains. They use robust components and optimized materials for high loads, shock resistance, and long service life in demanding environments.



Hollow pin chains

Hollow pin chains are roller chains with hollow pins for easy attachment of rods or accessories without disassembly, offering flexibility for conveyors and material handling. They are durable, adaptable, and available in various sizes and finishes for quick adjustments and maintenance.



Cardan chains

Cardan chains are specialized chains designed for universal joint systems, enabling torque transmission between misaligned shafts. They feature precision-engineered links and joints for high flexibility, smooth power transfer, and durability under variable angles and loads.



Conveyor chains

Conveyor chains are heavy-duty chains for material transport, using case-hardened pins and bushes with rollers that rotate under pressure. They provide high strength, durability, and adaptability for harsh environments, ideal for mining, food processing, and assembly lines.



Silent chains

Silent chains are precision-engineered with toothed links for smooth sprocket engagement, enabling high-speed power transmission with low noise and vibration. They provide wear resistance, high load capacity, and precise operation for automotive and industrial use.

Friction and wear

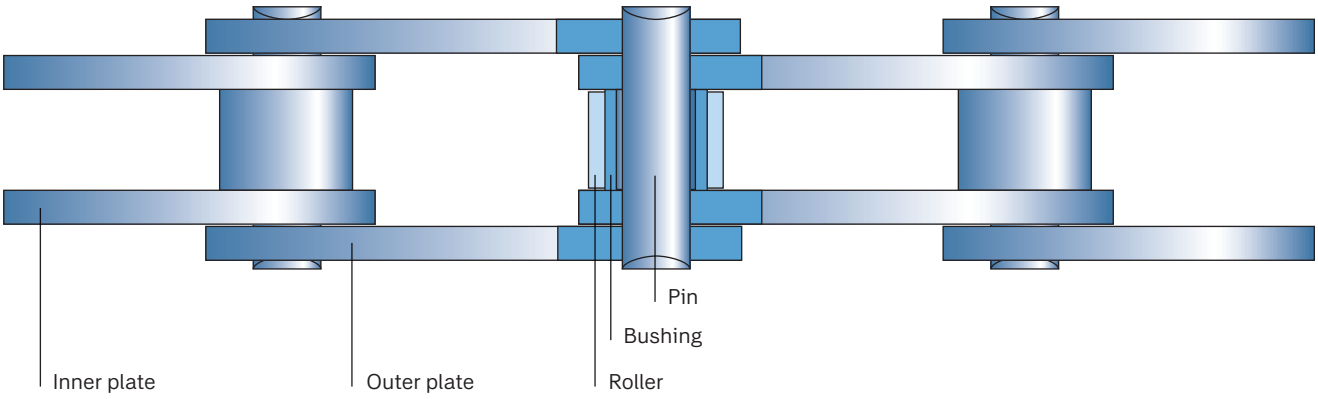



Friction points of chains

Lubrication in chains is essential because friction and wear occur at multiple internal contact points during operation. The primary friction interfaces include the pins and bushings, where relative rotation happens; the rollers and bushings, which experience rolling and sliding contact; and the inner and outer plates, which interact with the pins under load. Without proper lubrication, these surfaces suffer from metal-to-metal contact, leading to increased wear, heat generation, and energy loss.

A suitable lubricant forms a thin film between these components, reducing direct surface contact and minimizing friction. This film also helps dissipate heat, prevent corrosion, and carry away contaminants. By reducing friction at these critical points, lubrication extends chain life, improves efficiency, and ensures smooth power transmission.

Wear of load rollers:

- If the chain rollers are properly lubricated, they rotate smoothly while supporting the load.
- When lubrication is insufficient, the rollers stop rotating and begin sliding along their track.
- Once the rollers cease to rotate, irreversible damage occurs as their external surfaces wear out.
- Worn rollers lead to increased power consumption, higher noise emissions, and the chain eventually loses proper tracking.
- As friction continues to rise, the stress on the components escalates until the chain links ultimately fail.

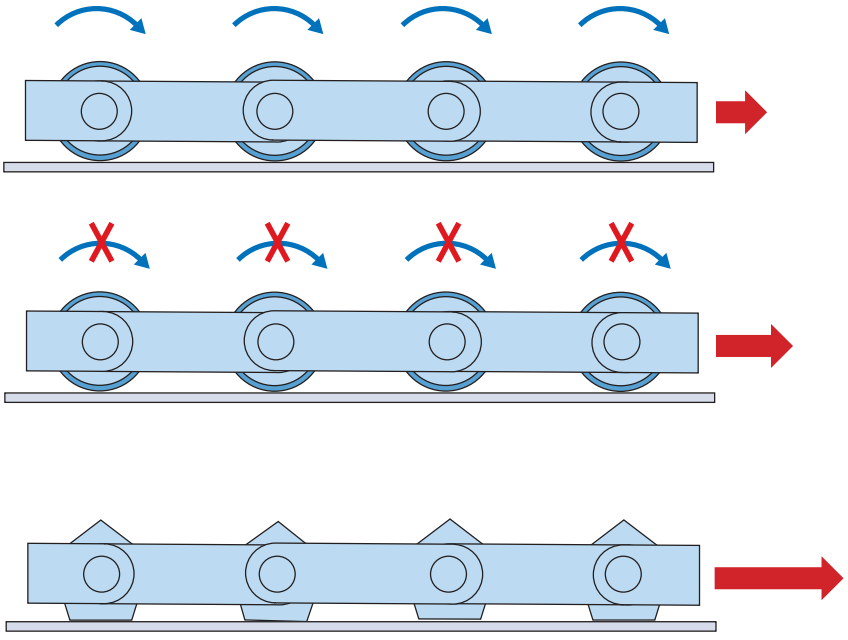

Chain elongation

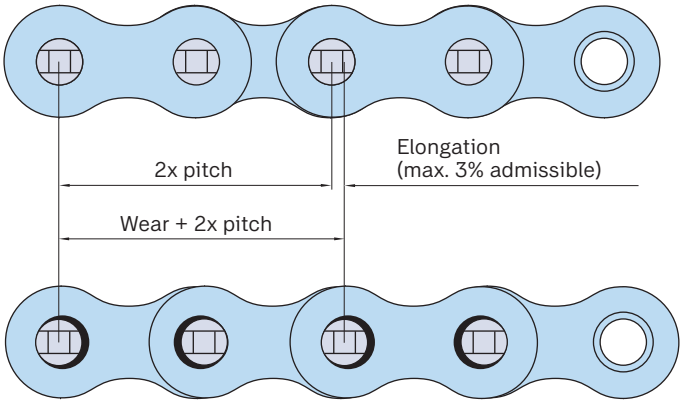

The main reasons for elongation of industrial roller chains:

- Wear on pins and bushings – friction during articulation gradually removes material, increasing clearance and making the chain longer.
- Overloading and shock loads – operating beyond design capacity or sudden impacts cause excessive stress and deformation.
- Misalignment – improper sprocket alignment leads to uneven load distribution and localized wear.
- Contamination and corrosion – dirt, moisture, and chemicals prevent proper lubrication and degrade metal surfaces.

A chain that elongates is a chain that wears out

Industrial roller chain elongation mainly results from wear on internal components, especially at pin and bushing interfaces. Each articulation introduces friction, increasing clearance and lengthening the chain. Plates also face friction during load transfer, causing deformation and fatigue. As these changes accumulate, the chain loses pitch accuracy, leading to poor sprocket engagement, reduced efficiency, and premature failure.

The best way to prevent elongation is proper lubrication. A protective film minimizes metal-to-metal contact at pins, bushings, and plates, reducing wear. By lowering friction and dissipating heat, lubrication extends chain life and maintains dimensional stability for smooth power transmission. In short, consistent lubrication is the most effective defense against elongation and costly downtime. Chain manufacturers typically define an admissible elongation limit of 3%, which is widely recognized as an industry standard.

This threshold ensures that the chain maintains proper engagement with sprockets and avoids excessive pitch mismatch, which can lead to accelerated wear or catastrophic failure. Beyond this point, the risk of operational issues such as vibration, noise, and sprocket damage increases significantly. By adhering to this limit, producers provide a clear guideline for maintenance and replacement, safeguarding both equipment performance and safety.

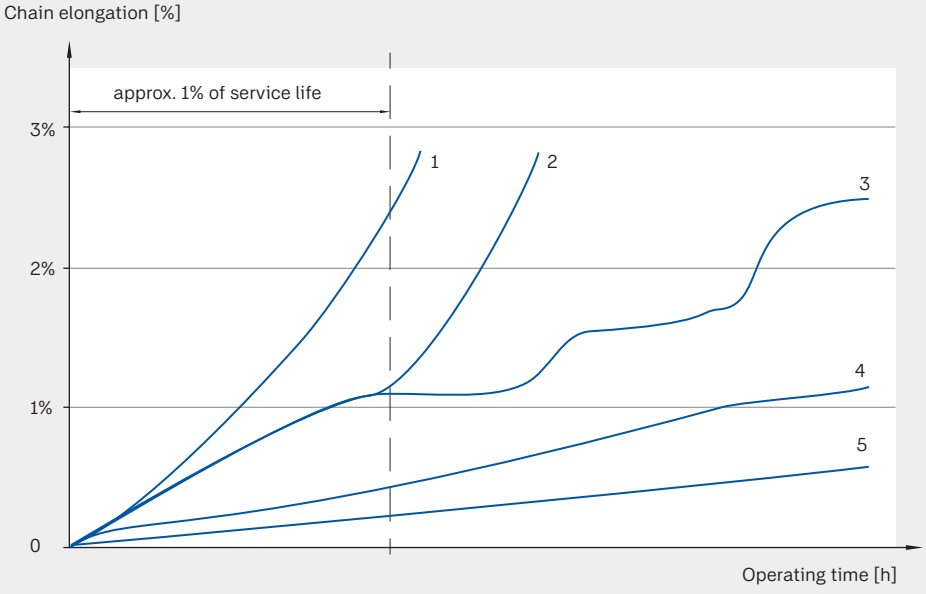

1. No chain lubrication
2. Initial chain lubrication - no relubrication
3. Chain relubrication, but with insufficient intervals and dry running of the chain
4. Chain relubrication, but incorrect or with contaminated lubricant
5. Optimal chain lubrication

Chain lubricants



Chain oils

Chain oils require proper viscosity to penetrate tight clearances and maintain a stable film under pressure, with high film strength and low volatility to resist evaporation at high temperatures. They contain anti-wear, oxidation, and corrosion inhibitors, plus EP additives for shock loads. Thermal stability prevents sludge and ensures consistent performance, reducing friction and wear for reliable chain operation. Selecting the right oil depends on application specifics like load, speed, and temperature, as well as conditions and regulations, such as food-grade certification or environmental compliance.

Chain greases for chains designed for grease lubrication

Engineered chains often operate under heavy loads, slow speeds, and harsh environments, making grease an ideal lubricant for long-lasting protection. Physically, chain greases provide high consistency and adhesion, ensuring they stay in place and maintain a lubricating film even under shock loads. Chemically, they include anti-wear additives, oxidation inhibitors, and sometimes extreme-pressure (EP) components for boundary lubrication. These properties reduce friction, prevent corrosion, and extend service life. For specific applications, greases can be formulated to meet special requirements, such as food-grade certifications for processing environments or compliance with environmental and safety standards.



Chain lubrication

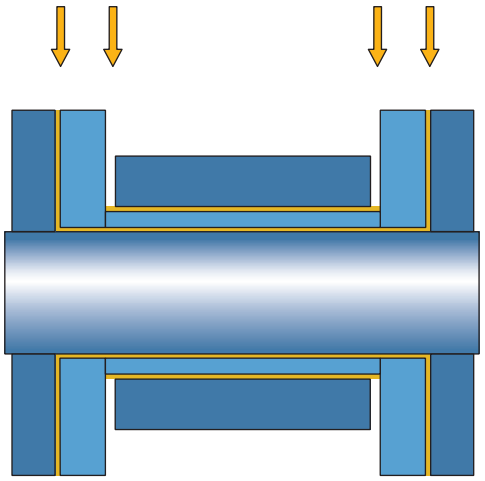

Oil lubrication

Oil lubrication solutions

Even though manual lubrication is still widespread, automatic lubrication systems are the most reliable solution, ensuring consistent oil delivery and reducing maintenance downtime.

SKF systems offer several methods tailored to application needs, including oil brush systems for continuous contact lubrication, air-assisted lubrication for precise oil distribution in dynamic environments, and airless projection systems for clean, targeted application without compressed air.

Applications

- Conveyor chains
- Drive chains

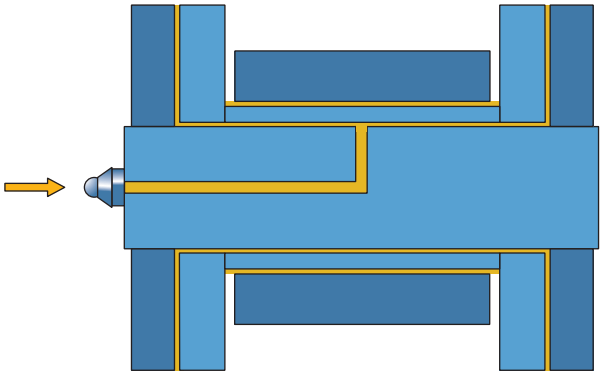

Grease lubrication (injection)

Grease injection solutions

For large, high-investment engineered chains, grease injection systems are often the only viable solution to ensure proper lubrication under extreme loads and harsh conditions. These systems deliver grease directly into critical chain joints, assist to guaranteeing penetration and long-term protection where manual or conventional methods fail. SKF offers specialized solutions, which provide controlled dosing for consistent lubrication to help extend chain service life, reduce downtime, and work reliable in demanding operations.

Applications

- Engineered heavy duty chains





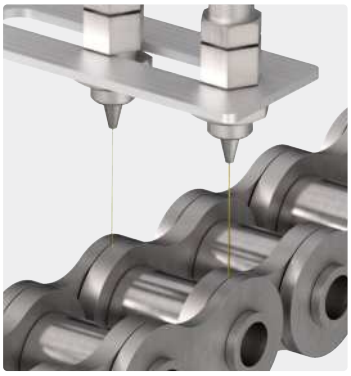



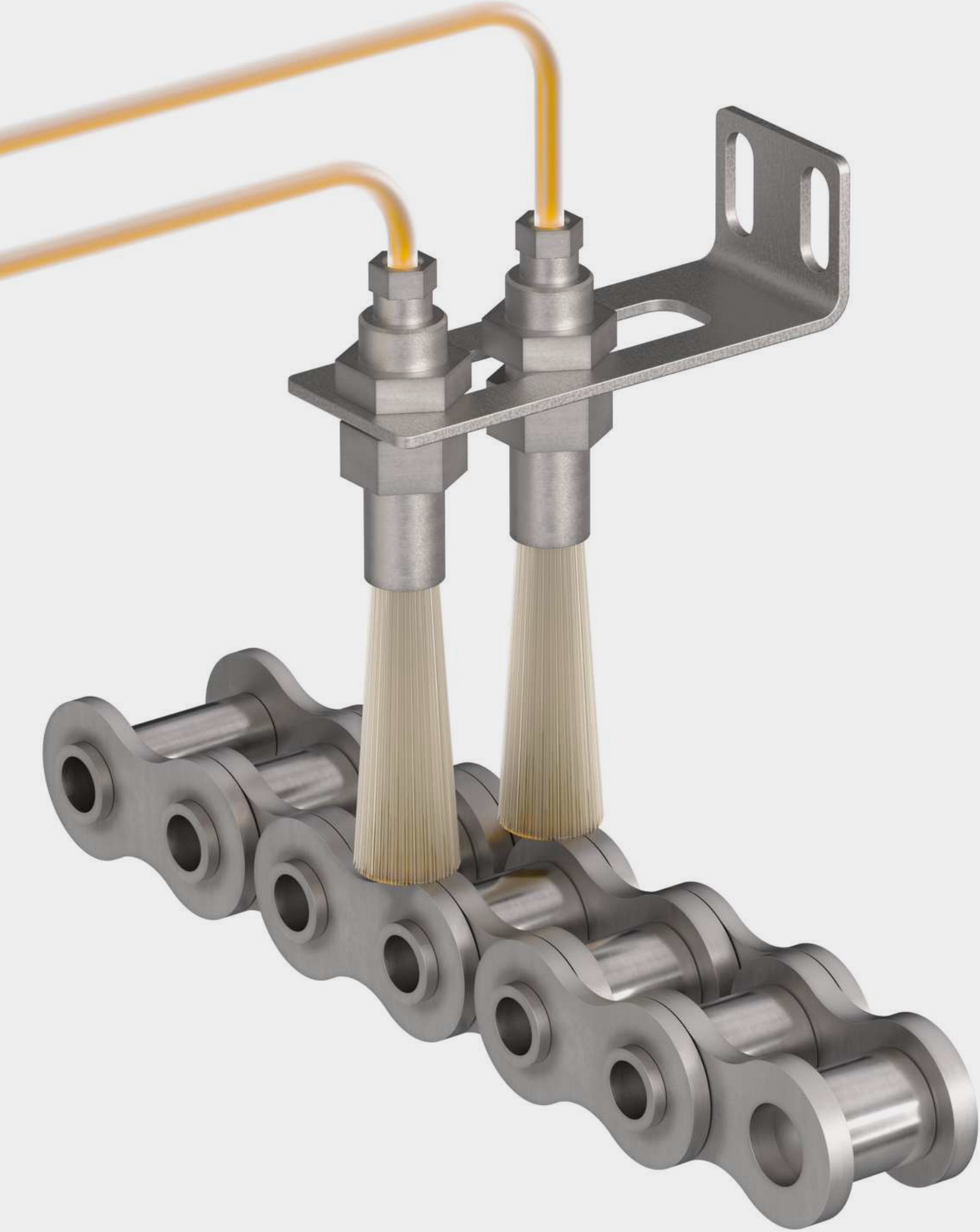

Brush lubrication solutions

Simple and cost-efficient lubrication of standard roller chain with pitch less than 50 mm

Brush-based chain lubrication is the most common industrial method for maintaining conveyor and drive chains. It works by applying oil directly to the chain through brushes that penetrate tight clearances, ensuring consistent coverage of pins and rollers. Metering devices intermittently supply small oil volumes to keep brushes consistently impregnated. This approach reduces wear, extends chain life, and minimizes downtime while allowing simple installation and easy adjustment of lubrication intervals.

Advantages:

- Consistent automatic lubrication
- Direct and reliable application
- Simple and cost-effective
- Adaptable design
- Easy to install

Limitations:

- Limited precision
- Higher lubricant consumption
- Wear and replacement of brushes
- Not suitable for heavy-duty and engineered chains



CL-MCU

- Automatic system
- Electrically operated
- Number of chains: 1–20
- Oil application: brushes
- Cost-efficient



LAPB

- Automatic lubricator
- Gas driven
- Number of chains: 1
- Oil application: brush
- Highly cost-efficient



CL-MKU

- Automatic system
- Electrically operated
- Number of chains: 1–30
- Oil application: brushes
- Medium level investment



OCL-M

- Automatic system
- Mechanically operated
- Number of chains: 1–6
- Oil application: brushes
- Cost-efficient



CL-MFE

- Automatic system
- Electrically operated
- Number of chains: 1–100
- Oil application: brushes
- Medium level investment



CL-ACP

- Automatic system
- Air operated
- Number of chains: 1–12
- Oil application: brushes
- Low level investment



CL-OS

- Automatic system
- Electrically operated
- Number of chains: 1–100
- Oil application: felt, nozzle
- High level investment

Chain lubrication LAPB

Gas driven, single-point automatic lubricator for light and fast roller chains



Features

- For 1 roller chain
- Cartridge operated system

Benefits

- Easy to install
- Cost-efficient solution
- Increase chain life span
- Reduce downtime and maintenance cost

Suitable for chains

- Chain width of up to 40 mm
- Chain pitch dimensions ≤ 50 mm
- Roller chains with speeds of up to 1 m/s

Description

The LAPB set offers the simplest and most cost-effective solution for lubricating individual or stand-alone chains. It features a single-point oil lubricator connected to a brush that maintains direct contact with the chain. The adjustable setting allows the complete 125 ml oil supply to be dispensed over a period of 1 to 12 months. Each LAPB set includes a pre-filled single-point lubricator with high-grade chain oil, a brush, mounting supports, and a plastic tube for easy installation.

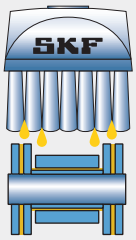

Small roller chains
- Plates thickness < 4 mm
- Chain pitch < 50 mm
- 1 brush

Technical data

Function principle	automatic, single-point lubricator	
Oil application method	brushes	
Lubricants	FM100, HMT68, FT220 (viscosity range up to 2 000 mm^2/s)	
Operating temperature	–20 to 60 °C	*–4°F to 140 °F*
Oil reservoir size	125 ml	
Outlets	1	
Mounting position (reservoir)	upright	
Mounting position (brushes)	as shown in the image	





LAGD * - gas driven single-point automatic lubricators

Order number	Description
LAGD 125/FM100	general purpose food grade chain oil
LAGD 125/HMT68	medium temperature chain oil
LAGD 125/FT220	high temperature food grade chain oil

* Includes non-return valve

Supports

Order number	Description
LAPC 50	lubricator accessory clamp for SKF SYSTEM 24
LAPC 13	mounting bracket for brush (metal)

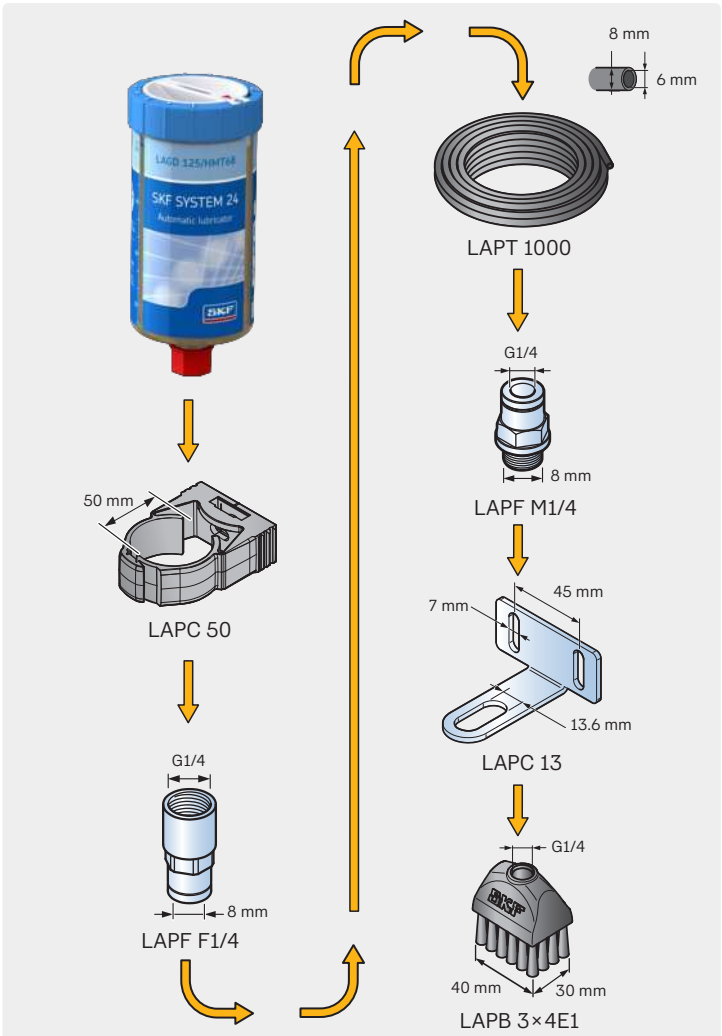

Fittings and accessories

Order number	Description
LAPF F1/4	female thread G1/4 for outer Ø8 mm flexible tube
LAPF M1/4	male thread G1/4 for outer Ø8 mm flexible tube

Tubes

Order number	Description
LAPT 1000	1 000 mm long flexible tube, outer Ø8 mm, inner Ø6 mm

Brush *

Order number	Description
LAPB 3x4E1	oil brush 30×40 mm (temp. range 15–80 °C)
LAPB 3x7E1	oil brush 30×70 mm (temp. range 15–80 °C)
LAPB 3x10E1	oil brush 30×100 mm (temp. range 15–80 °C)

* Brush should be contacting the chain at max. depth of 2 mm (*0.08 in.*).

Chain lubrication kit OCL-M

Mechanically operated lubrication system for up to 6 light and high-speed roller chains



Features

- For up to 6 roller chains
- Mechanically operated system
- Modular system, 1–2 brushes per chain
- For oil viscosity up to 2 000 mm^2/s (cSt)

Benefits

- Reliable lubricant application
- Kit solution with compact design
- Cost-efficient solution
- Easy to install

Suitable for chains

- Roller chains with speeds of up to 1 m/s
- Chain pitch dimensions ≤ 50 mm

Description

The OCL-M system offers a unique advantage: it requires no external power source, as its metering pump elements are mechanically driven by the machine's rotating shaft. Oil is delivered through metering outlets connected via plastic tubes to brushes that contact the chains, supplying precise, small volumes only when the chains are in motion. Designed primarily for agricultural machinery such as balers, it is also suitable for industrial applications involving multiple or high-speed conveyor and drive chains. Quick-fit connectors and plastic tubing helping to ensure easy and efficient installation.

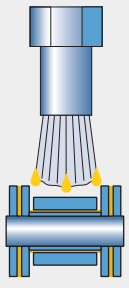

Small roller chains
- Plates thickness < 4 mm
- Chain pitch < 50 mm
- 1 brush

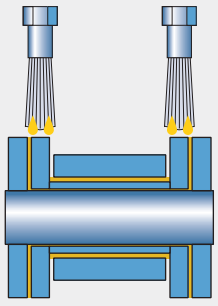

Medium and big roller chains
- Plates thickness > 4 mm
- Chain pitch > 50 mm
- 2 brushes

Technical data

Function principle	mechanically operated, multi-line lubrication system	
Oil application method	brushes	
Lubricant	mineral oils (viscosity range 32 to 2 000 mm^2/s)	
Drive speed (shaft)	min. 30 r/min max. 1 300 r/min	
Pump gear ratio	1:6.75 (1:27 available on request for high-speed chains)	
Operating temperature	0 to +70 °C	*+32 to 158°F*
Operating pressure	max. 10 bar	*max. 145 psi*
Oil reservoir size	5 l	*1.3 gal*
Pump outlets	1–12	
Metering quantity/outlet *	0.005–0.6 cm^3/rotation	*0.0003–0.036 in^3/ rotation*
Mounting position (pump)	upright	
Mounting position (brushes)	as shown in the image	

* The metering quantities depending on oil viscosity and system pressure and may therefore slightly varying.





OCL-M kits

Order number	Metering quantity cm^3/rotation	Number of outlets	Reservoir size	Number of brushes	Number of pump elements	Plastic hose line length
OCL-MK-0031200-3		8	5 l	8	2	24 m
OCL-MK-0001300-3		12	5 l	12	3	36 m

OCL-MK-0031200-3



OCL-MK-0001300-3



Chain lubrication system CL-ACP

Air operated, modular lubrication system for up to 12 small and high-speed roller chains



Features

- For up to 12 chains
- Air operated system
- Modular system, 1–2 brushes per chain
- For oil viscosity up to 1 500 mm²/s (cSt)
- Reservoir with filling level monitoring
- Controlled by SKF LMC2 or PLC

Benefits

- Easy to expand and reduce
- Easy to install

Suitable for chains

- Roller chains with speeds of up to 1 m/s
- Chain pitch dimensions ≤ 50 mm

Description

The CL-ACP is a compact, pneumatically driven single-line chain lubrication system designed for environments without electrical power. Paired with 340 series metering devices and connected to lubrication brushes, it delivers precise, continuous oil application to roller chains. Ideal for price-sensitive applications in packaging, food processing, and other industries requiring reliable chain lubrication without electricity.

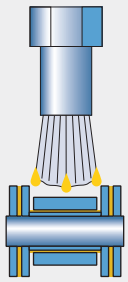

Small roller chains
- Plates thickness < 4 mm
- Chain pitch < 50 mm
- 1 brush

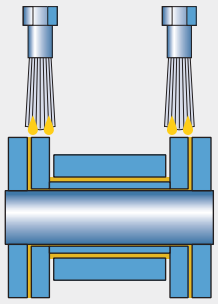

Medium and big roller chains
- Plates thickness > 4 mm
- Chain pitch > 50 mm
- 2 brushes

Technical data

Function principle	air operated, single-line oil lubrication system	
Oil application method	brushes	
Lubricant	mineral and synthetic oil, 20 to 1 500 mm²/s	
Operating temperature	0 to +60 °C	*32 to 140 °F*
Operating pressure	max. 80 bar	*max. 1 150 psi*
Internal relief pressure	max. 3 bar	*max. 44 psi*
Inlet air pressure	3.5 to 10 bar	*50 to 145 psi*
Oil reservoir size	0,5l; 1,0 l and 1,7 l	*0.13; 0.26 and 0.44 gal*
Level monitoring	visual and with sensor, dep. on reservoir size	
Pump outlets	1	
Pump metering quantity	max. 15 cm³/stroke	*0.92 in.³/stroke*
Metering device outlets	2-20	
Metering device outlet quantity *	0.01 – 0.16 cm³	*0.0006 – 0.009 in.³*
Mounting position (pump)	upright	
Mounting position (brushes)	as shown in the image	

* The metering quantities depending on oil viscosity and system pressure and may therefore slightly varying.





ACP pump and system controller

Order number	Metering quantity	Pump outlet side	Reservoir size	Level monitoring
ACP15-10A1X1X-U05	15 cm^3/stroke	right	0.5 l	Visual
ACP15-10A11XX-U05	15 cm^3/stroke	left	0.5 l	Visual
ACP15-1WA1X1X-U10	15 cm^3/stroke	right	1.0 l	Sensor
ACP15-1WA11XX-U10	15 cm^3/stroke	left	1.0 l	Sensor
ACP15-1WA1X1X-U17	15 cm^3/stroke	right	1.7 l	Sensor
ACP15-1WA11XX-U17	15 cm^3/stroke	left	1.7 l	Sensor

Order number	Description
236–10567–6	LMC 2; 230 V AC controller
236–10567–5	LMC 2; 24 V DC controller

Air supply/actuation system

Order number	Description
231-900-028	Air pressure regulating valve
231-900-028.U1	Air pressure regulating valve including filter and water separator
MOD-1016+428	2/2 way solenoid air control valve, 230 V AC
MOD-1016+428	2/2 way solenoid air control valve, 24 V DC

Metering devices

Order number	Metering quantity per outlet	Number of outlets	Mainline connection in	Mainline connection out	Connection outlet
342-4VS-11000-TY	0.01 cm^3/cycle	2	SKF Quick connector for Ø6 mm	vent plug	SKF Quick connector for Ø4 mm
342-4VS-11000-TT	0.01 cm^3/cycle	2	SKF Quick connector for Ø6 mm	SKF Quick connector for Ø6 mm	SKF Quick connector for Ø4 mm
342-4VS-22000-TY	0.03 cm^3/cycle	2	SKF Quick connector for Ø6 mm	vent plug	SKF Quick connector for Ø4 mm
342-4VS-22000-TT	0.03 cm^3/cycle	2	SKF Quick connector for Ø6 mm	SKF Quick connector for Ø6 mm	SKF Quick connector for Ø4 mm
342-4VS-33000-TY	0.06 cm^3/cycle	2	SKF Quick connector for Ø6 mm	vent plug	SKF Quick connector for Ø4 mm
342-4VS-33000-TT	0.06 cm^3/cycle	2	SKF Quick connector for Ø6 mm	SKF Quick connector for Ø6 mm	SKF Quick connector for Ø4 mm
342-4VS-44000-TY	0.10 cm^3/cycle	2	SKF Quick connector for Ø6 mm	vent plug	SKF Quick connector for Ø4 mm
342-4VS-44000-TT	0.10 cm^3/cycle	2	SKF Quick connector for Ø6 mm	SKF Quick connector for Ø6 mm	SKF Quick connector for Ø4 mm
342-4VS-55000-TY	0.16 cm^3/cycle	2	SKF Quick connector for Ø6 mm	vent plug	SKF Quick connector for Ø4 mm
342-4VS-55000-TT	0.16 cm^3/cycle	2	SKF Quick connector for Ø6 mm	SKF Quick connector for Ø6 mm	SKF Quick connector for Ø4 mm

Brushes

Order number	Tube Ø	Description
552-32407-1	4 mm	Oil brush, Ø9 mm, incl. elbow quick connector
552-33735-1	4 mm	Oil brush, Ø9 mm, incl. straight quick connector
7062-02003-4	–	Clip for brushed fixing
7082-04093-4	–	Brush support

Tubing (lubricant line)

Order number	Description
T04BCT05000XXXXXXX	Ø4 mm plastic tube, 5 m length
T04BCT20000XXXXXXX	Ø4 mm plastic tube, 20 m length
T06BET05000XXXXXXX	Ø6 mm main line plastic tube, 5 m length
T06BET20000XXXXXXX	Ø6 mm main line plastic tube, 20 m length

Chain lubrication system CL-MCU

Electrically operated, modular lubrication system for up to 20 standard and high-speed roller chains



Features

- For up to 20 chains
- Modular system, 1–2 brushes per chain
- For oil viscosity up to 1 500 mm^2/s (cSt)
- Reservoir with filling level monitoring

Benefits

- Reliable lubricant application
- Easy to expand and reduce
- Cost-efficient solution
- Easy to install

Suitable for chains

- Roller chains with speeds of up to 1 m/s
- Chain pitch dimensions ≤ 50 mm

Description

The CL-MCU system is a cost-effective solution featuring the single-phase motor-driven MCU pump unit combined with 340 series metering devices and brushes in direct contact with the chains. It has been designed for small to medium-sized systems with up to 20 brushes positioned several meters from the MCU unit, offering high configurability. Each metering device delivers precise, small volumes of oil to the brushes for optimal chain lubrication. SKF Quick connector fittings and plastic tubing make installation simple and efficient. Intermittent operation of the MCU must be controlled by an external controller or by PLC.

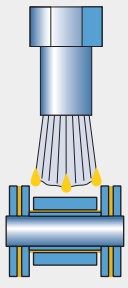

Small roller chains
- Plates thickness < 4 mm
- Chain pitch < 50 mm
- 1 brush

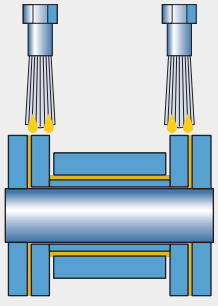

Medium and big roller chains
- Plates thickness > 4 mm
- Chain pitch > 50 mm
- 2 brushes

Technical data

Function principle	electrically operated, single-line lubrication system	
Oil application method	brushes	
Lubricant	oil with 20 to 1 500 mm^2/s compatible with plastics, NBR elastomers and copper alloys	
Operating temperature	+10 to +40 °C	*50 to 104 °F*
Operating pressure	max. 35 bar	*507 psi*
Internal relief pressure	1 bar	*14.5 psi*
Pump drive motor	230 V AC/50 Hz (24 V DC on request)	
Oil reservoir size	2 l or 5 l	*0.53 gal or 1.3 gal*
Level monitoring	electrical level switch with low level signal	
Pump outlets	1	
Metering quantity (pump)/ outlet *	0.2 l/min	*0.05 gal/min*
Connection outlet	M10x1	
Metering quantity per brush *	0.01 – 0.16 cm^3	*0.0006 – 0.009 in^3*
Protection class	IP54	
Mounting position (pump)	upright	
Mounting position (brushes)	as shown in the image	

* The metering quantities depending on oil viscosity and system pressure and may therefore slightly varying.





MCU pump *

Order number	Metering quantity	Operating pressure	Reservoir size	Level monitoring	Voltage
MCU2-G1-10-924	0.2 l/min	18 bar	2 l	electrical level switch, 1 cable gland	24 V DC
MCU2-G2-10-924	0.2 l/min	18 bar	5 l	electrical level switch, 1 cable gland	24 V DC
MCU2-G1-10-428	0.2 l/min	18 bar	2 l	electrical level switch, 1 cable gland	230 VAC
MCU2-G2-10-428	0.2 l/min	18 bar	5 l	electrical level switch, 1 cable gland	230 VAC
MCU2-G1-11-924	0.2 l/min	35 bar	2 l	electrical level switch, 1 cable gland	24 V DC
MCU2-G2-11-924	0.2 l/min	35 bar	5 l	electrical level switch, 1 cable gland	24 V DC
MCU2-G1-11-428	0.2 l/min	35 bar	2 l	electrical level switch, 1 cable gland	230 VAC
MCU2-G2-11-428	0.2 l/min	35 bar	5 l	electrical level switch, 1 cable gland	230 VAC

* Connection outlet to be ordered separately, order number **406-004-VS**. Further MCU pump designs available on request.

System controller

Order number	Description
236–10567–6	LMC 2; 230 V AC (230 VAC)
236–10567–5	LMC 2; 24 V DC (24 VDC)

Metering devices

Order number	Metering quantity per outlet	Number of outlets	Mainline connection in	Mainline connection out	Connection outlet
342-4VS-11000-TY	0.01 cm^3/cycle	2	SKF Quick connector for Ø6 mm	vent plug	SKF Quick connector for Ø4 mm
342-4VS-11000-TT	0.01 cm^3/cycle	2	SKF Quick connector for Ø6 mm	SKF Quick connector for Ø6 mm	SKF Quick connector for Ø4 mm
342-4VS-22000-TY	0.03 cm^3/cycle	2	SKF Quick connector for Ø6 mm	vent plug	SKF Quick connector for Ø4 mm
342-4VS-22000-TT	0.03 cm^3/cycle	2	SKF Quick connector for Ø6 mm	SKF Quick connector for Ø6 mm	SKF Quick connector for Ø4 mm
342-4VS-33000-TY	0.06 cm^3/cycle	2	SKF Quick connector for Ø6 mm	vent plug	SKF Quick connector for Ø4 mm
342-4VS-33000-TT	0.06 cm^3/cycle	2	SKF Quick connector for Ø6 mm	SKF Quick connector for Ø6 mm	SKF Quick connector for Ø4 mm
342-4VS-44000-TY	0.10 cm^3/cycle	2	SKF Quick connector for Ø6 mm	vent plug	SKF Quick connector for Ø4 mm
342-4VS-44000-TT	0.10 cm^3/cycle	2	SKF Quick connector for Ø6 mm	SKF Quick connector for Ø6 mm	SKF Quick connector for Ø4 mm
342-4VS-55000-TY	0.16 cm^3/cycle	2	SKF Quick connector for Ø6 mm	vent plug	SKF Quick connector for Ø4 mm
342-4VS-55000-TT	0.16 cm^3/cycle	2	SKF Quick connector for Ø6 mm	SKF Quick connector for Ø6 mm	SKF Quick connector for Ø4 mm

Brushes

Order number	Tube Ø	Description
552-32407-1	4 mm	Oil brush, Ø9 mm, incl. elbow quick connector
552-33735-1	4 mm	Oil brush, Ø9 mm, incl. straight quick connector
7062-02003-4	–	Clip for brushed fixing
7082-04093-4	–	Brush support

Tubing (lubricant line)

Order number	Description
T04BCT05000XXXXXXX	Ø4 mm plastic tube, 5 m length
T04BCT20000XXXXXXX	Ø4 mm plastic tube, 20 m length
T06BET05000XXXXXXX	Ø6 mm main line plastic tube, 5 m length
T06BET20000XXXXXXX	Ø6 mm main line plastic tube, 20 m length

Chain lubrication system CL-MKU

Electrically operated, modular lubrication system for up to 30 high-performance roller chains



Features

- For up to 30 chains
- Modular system, 1–2 brushes per chain
- For oil viscosity up to 1 500 mm^2/s (cSt)
- Reservoir with filling level monitoring
- Pump with integrated controller

Benefits

- Reliable lubricant application
- Integrated system control unit
- Easy to expand and reduce
- Easy to install

Suitable for chains

- Roller chains with speeds of up to 1 m/s
- Chain pitch dimensions ≤ 50 mm

Description

The CL-MKU system is a versatile solution featuring the mid-range, single-phase motor-driven MKU pump unit with an integrated, adjustable controller. Combined with 340 series metering devices and brushes in direct contact with the chains, it is ideal for medium to large systems with up to 60 brushes positioned several meters from the MKU unit. The integrated controller manages intermittent operating cycles at regular intervals, ensuring each metering device delivers precise oil volumes to the brushes for optimal chain lubrication.
SKF Quick connector fittings and plastic tubing simplify installation and configuration.

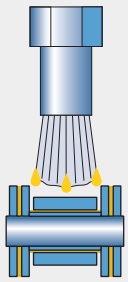

Small roller chains
- Plates thickness < 4 mm
- Chain pitch < 50 mm
- 1 brush

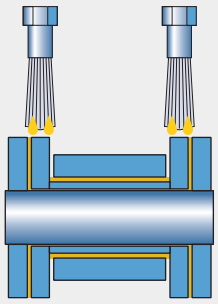

Medium and big roller chains
- Plates thickness > 4 mm
- Chain pitch > 50 mm
- 2 brushes

Technical data

Function principle	electrically operated, single-line lubrication system incl. controller	
Oil application method	brushes	
Lubricant	mineral oil or synthetic oil, 20 to 1 500 mm^2/s	
Operating temperature	+10 to 40 °C	*50 to 104 °F*
Operating pressure	max. 30 bar	*435 psi*
Internal relief pressure	1 bar	*14.5 psi*
Oil reservoir size	3 or 6 l	*0.79 or 1.d58 gal*
Level monitoring	electrical level switch with low level signal	
Pump outlets	1	
Metering quantity (pump)	0.1 – 0.5 l/min	*0.026 – 0.132 gal/min*
Metering quantity per brush *	0.01 – 0.16 cm^3	*0.0006 – 0.009 in^3*
Protection class	IP54	
Mounting position (pump)	upright	
Mounting position (brushes)	as shown in the image	

* The metering quantities depending on oil viscosity and system pressure and may therefore slightly varying.





MKU pump *

Order number	Metering quantity	Integrated controller	Pressure monitoring	Reservoir size	Level monitoring	Voltage
MKU1-12CC10000+429	0.1 l/min	IG38 (timer)	pressure gauge	3 l	electrical level switch, 1 cable gland	115 VAC
MKU1-12CC10000+428	0.1 l/min	IG38 (timer)	pressure gauge	3 l	electrical level switch, 1 cable gland	230 VAC
MKU2-12CC10000+429	0.2 l/min	IG38 (timer)	pressure gauge	3 l	electrical level switch, 1 cable gland	115 VAC
MKU2-12CC10000+428	0.2 l/min	IG38 (timer)	pressure gauge	3 l	electrical level switch, 1 cable gland	230 VAC

Order number	Designation
406-054-VS	G1/4 outlet fitting with SKF Quick connector for tube Ø6 mm

* Further MKU pump designs available on request.

Metering devices

Order number	Metering quantity per outlet	Number of outlets	Mainline connection in	Mainline connection out	Connection outlet
342-4VS-11000-TY	0.01 cm^3/cycle	2	SKF Quick connector for Ø6 mm	vent plug	SKF Quick connector for Ø4 mm
342-4VS-11000-TT	0.01 cm^3/cycle	2	SKF Quick connector for Ø6 mm	SKF Quick connector for Ø6 mm	SKF Quick connector for Ø4 mm
342-4VS-22000-TY	0.03 cm^3/cycle	2	SKF Quick connector for Ø6 mm	vent plug	SKF Quick connector for Ø4 mm
342-4VS-22000-TT	0.03 cm^3/cycle	2	SKF Quick connector for Ø6 mm	SKF Quick connector for Ø6 mm	SKF Quick connector for Ø4 mm
342-4VS-33000-TY	0.06 cm^3/cycle	2	SKF Quick connector for Ø6 mm	vent plug	SKF Quick connector for Ø4 mm
342-4VS-33000-TT	0.06 cm^3/cycle	2	SKF Quick connector for Ø6 mm	SKF Quick connector for Ø6 mm	SKF Quick connector for Ø4 mm
342-4VS-44000-TY	0.10 cm^3/cycle	2	SKF Quick connector for Ø6 mm	vent plug	SKF Quick connector for Ø4 mm
342-4VS-44000-TT	0.10 cm^3/cycle	2	SKF Quick connector for Ø6 mm	SKF Quick connector for Ø6 mm	SKF Quick connector for Ø4 mm
342-4VS-55000-TY	0.16 cm^3/cycle	2	SKF Quick connector for Ø6 mm	vent plug	SKF Quick connector for Ø4 mm
342-4VS-55000-TT	0.16 cm^3/cycle	2	SKF Quick connector for Ø6 mm	SKF Quick connector for Ø6 mm	SKF Quick connector for Ø4 mm

Brushes

Order number	Tube Ø	Description
552-32407-1	4 mm	Oil brush, Ø9 mm, incl. elbow quick connector
552-33735-1	4 mm	Oil brush, Ø9 mm, incl. straight quick connector
7062-02003-4	–	Clip for brushed fixing
7082-04093-4	–	Brush support

Tubing (lubricant line)

Order number	Description
T04BCT05000XXXXXXX	Ø4 mm plastic tube, 5 m length
T04BCT20000XXXXXXX	Ø4 mm plastic tube, 20 m length
T06BET05000XXXXXXX	Ø6 mm main line plastic tube, 5 m length
T06BET20000XXXXXXX	Ø6 mm main line plastic tube, 20 m length

Chain lubrication system CL-MFE

Electrically operated, modular lubrication system for up to 100 high-performance roller chains



Features

- For up to 100 chains
- Modular system, 1–2 brushes per chain
- For oil viscosity up to 2 000 mm²/s (cSt)
- Reservoir with filling level monitoring

Benefits

- Reliable lubricant application
- Solution with compact design
- Easy to expand and reduce
- Easy to install

Suitable for chains

- Roller chains with speeds of up to 1 m/s
- Chain pitch dimensions ≤ 50 mm

Description

The CL-MFE system is a high-performance solution featuring the three-phase motor-driven MFE pump unit combined with 340 series metering devices and brushes in direct contact with the chains. Designed for large-scale applications, it supports up to 100 brushes positioned distanced from the MFE unit and offers extensive configurability. The intermittent operating cycles must be controlled by an externally controller or PLC. Each metering device delivers precise oil volumes to the brushes for optimal chain lubrication. SKF Quick connector fittings and plastic tubing simplify installation and maintenance.

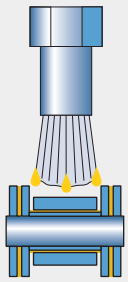

Small roller chains
- Plates thickness < 4 mm
- Chain pitch < 50 mm
- 1 brush

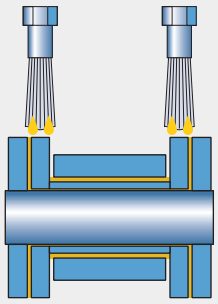

Medium and big roller chains
- Plates thickness > 4 mm
- Chain pitch > 50 mm
- 2 brushes

Technical data

Function principle	electrically operated, single-line lubrication system	
Oil application method	brushes	
Lubricant	mineral oil or synthetic oil, 20 to 2 000 mm²/s	
Operating temperatures		
Pump unit	+10 to +40 °C	*50 to 104 °F*
Brushes	0 to +70 °C	*32 to 158 °F*
Operating pressure	max. 28 bar	*406 psi*
Internal relief pressure	1 bar	*14.5 psi*
Oil reservoir size	3; 6 or 15 l	*0.79; 1.58 or 3.96 gal*
Level monitoring	1 change-over; 2 change-over contacts (reed contacts)	
Pump outlets	1	
Connection outlet	M14x1.5	
Metering quantity/outlet *	0.5 l/min	*0.13 gal/min*
Metering quantity per brush *	0.01 – 0.16 cm³	*0.0006 – 0.009 in³*
Protection class	IP54	
Mounting position (pump)	upright	
Mounting position (brushes)	as shown in the image	

* The metering quantities depending on oil viscosity and system pressure and may therefore slightly varying.





MFE pump *

Order number	Metering quantity	Integrated relief valve	Reservoir size	Level monitoring	Voltage
MFE5-BW7-S22+1GD	0.5 l/min	•	6l	Level switch, square plug	460 VAC/60Hz
MFE5-BW7+299	0.5 l/min	•	6l	Level switch, square plug	230 VAC/50Hz
MFE5-BW16-S145+1GD	0.5 l/min	•	15l	Level switch, M12x1 socket	460 VAC/60Hz
MFE5-BW16+299	0.5 l/min	•	15l	Level switch, square plug	230 VAC/50Hz

Order number	Designation
408-413	M14x1.5 outlet fitting for tube Ø8 mm

* Further MFE pump designs available on request.

System controller

Order number	Description
236–10567–6	LMC 2; 230 AC (230 VAC)
236–10567–5	LMC 2; 24 DC (24 VDC)

Metering devices

Order number	Metering quantity per outlet	Number of outlets	Mainline connection in	Mainline connection out	Connection outlet
342-4VS-11000-UY	0.01 cm^3/cycle	2	SKF Quick connector for Ø8 mm	vent plug	SKF Quick connector for Ø4 mm
342-4VS-11000-UU	0.01 cm^3/cycle	2	SKF Quick connector for Ø8 mm	SKF Quick connector for Ø8 mm	SKF Quick connector for Ø4 mm
342-4VS-22000-UY	0.03 cm^3/cycle	2	SKF Quick connector for Ø8 mm	vent plug	SKF Quick connector for Ø4 mm
342-4VS-22000-UU	0.03 cm^3/cycle	2	SKF Quick connector for Ø8 mm	SKF Quick connector for Ø8 mm	SKF Quick connector for Ø4 mm
342-4VS-33000-UY	0.06 cm^3/cycle	2	SKF Quick connector for Ø8 mm	vent plug	SKF Quick connector for Ø4 mm
342-4VS-33000-UU	0.06 cm^3/cycle	2	SKF Quick connector for Ø8 mm	SKF Quick connector for Ø8 mm	SKF Quick connector for Ø4 mm
342-4VS-44000-UY	0.10 cm^3/cycle	2	SKF Quick connector for Ø8 mm	vent plug	SKF Quick connector for Ø4 mm
342-4VS-44000-UU	0.10 cm^3/cycle	2	SKF Quick connector for Ø8 mm	SKF Quick connector for Ø8 mm	SKF Quick connector for Ø4 mm
342-4VS-55000-UY	0.16 cm^3/cycle	2	SKF Quick connector for Ø8 mm	vent plug	SKF Quick connector for Ø4 mm
342-4VS-55000-UU	0.16 cm^3/cycle	2	SKF Quick connector for Ø8 mm	SKF Quick connector for Ø8 mm	SKF Quick connector for Ø4 mm

Brushes

Order number	Tube Ø	Description
552-32407-1	4 mm	Oil brush, Ø9 mm, incl. elbow quick connector
552-33735-1	4 mm	Oil brush, Ø9 mm, incl. straight quick connector
7062-02003-4	–	Clip for brushed fixing
7082-04093-4	–	Brush support

Tubing (lubricant line)

Order number	Description
T04BCT05000XXXXXXX	Ø4 mm plastic tube, 5 m length
T04BCT20000XXXXXXX	Ø4 mm plastic tube, 20 m length
T08BET05000XXXXXXX	Ø8 mm main line plastic tube, 5 m length
T08BET20000XXXXXXX	Ø8 mm main line plastic tube, 20 m length

Chain lubrication system CL-OS

Electrically or air operated, modular lubrication system for up to 100 roller chains in harsh working conditions



Features

- For up to 100 chains
- Modular system, 1–2 felts and sliding surface nozzle per chain
- For oil viscosity up to 2 000 mm²/s (cSt)
- Pump for 180 kg *(400 lb)* oil barrels

Benefits

- Proven under demanding conditions
- Reliable lubricant application
- Easy to expand and reduce

Suitable for chains

- Heavy roller chains - no speed limit, no pitch dimension limits

Description

The SKF CL-OS is a robust, electrically or air operated chain lubrication system built for dependable performance in demanding industrial environments. Its modular design supports lubrication of up to 100 roller chains, using felts and sliding surface nozzles for precise oil applications. The system handles oil viscosities from 20 to 2 000 mm²/s. Each chain can be equipped with felts and sliding surface nozzles for flexible configuration across different chain sizes. An optional air or electrically operated pumping centre - compatible with 180 kg oil barrels - feeds a single-line system with oil and enables the metering devices delivering 25 to 500 cm³/min, depending on viscosity and pressure. Engineered for harsh conditions, the CL OS provides reliable lubrication, long service life, and straightforward scalability.

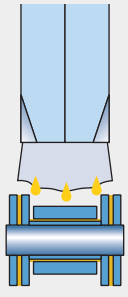

Small roller chains
- Chains outer width ≤ 150 mm
- Chain pitch ≤ 50 mm
- 1 felt

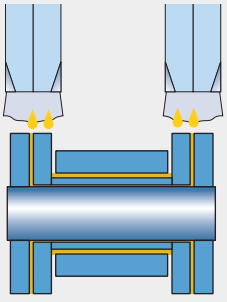

Medium and big roller chains
- Chains outer width > 150 mm
- Chain pitch > 50 mm
- 2 felts

Technical data

Function principle	electrically or air operated, single-line lubrication system	
Oil application method	felts or sliding surface nozzles	
Lubricant	mineral and synthetic oils 20 to 2 000 mm²/s	
Operating temperatures		
Pump unit, pump centre	–10 to 50 °C	*14 to 122 °F*
Felts, nozzles	–25 to 130 °C	*– 13 to 248°F*
Operating pressure	max. 75 bar	*1 088 psi*
Internal relief pressure	< 5 bar	*72 psi*
Oil reservoir size (barrel)	180 kg	*400 lb*
Pump outlets	1	
Pump delivery rate	6 to 11 l/min	*1.5 to 2.9 gal/min*
Metering device outlet quantity *	25 to 500 cm³/min	*1.52 to 30.51 in³/min*
Protection class (pump)	IP65	
Mounting position (pump)	upright	
Mounting position (nozzles)	upright	
Mounting position (valves)	any	

* The metering quantities depending on oil viscosity and system pressure and may therefore slightly varying.





OS pumping centre options *

Order number	Designation	Actuation
12381703	SKF-MPB-PUMP-1/1-1:20	air operated pump
12392520	OS-2000-PS-6-400V-24V	electrically operated

* Further OS pump designs available on request.

System controller

Order number	Description	Material
12380210	ST–1240 GRAPH	steel, painted RAL 7035
12380200	ST–1240-GRAPH-4	steel, painted RAL 7035

OS metering devices

Order number	Designation	Material	Metering quantity per outlet		Number of outlets	Outlet tube Ø
12394441	OS-33-SS-06	AISI316	0,01-2,82 cm^3	0.0006 to 0.1720 in^3	1	Ø6 mm
12394440	OS-33-ZN-06	galvanized and steel	0,01-2,82 cm^3	0.0006 to 0.1720 in^3	1	Ø6 mm
12394550	OS-4-ZN-06	galvanized and steel	0,01-2,10 cm^3	0.0006 to 0.1282 in^3	1	Ø6 mm
			(25-500 cm^3/min)	*(1.52 to 30.51 in^3/min)*		

OS metering device mounting rails

Order number	Number of ports	Designation	Description	Inlet and outlet thread	Tube Ø
12390350	1	BPOS-01-AL	Mounting rail AL	G 1/4	12 mm
12390400	2	BPOS-02-AL	Mounting rail AL	G 1/4	12 mm
12390450	3	BPOS-03-AL	Mounting rail AL	G 1/4	12 mm
12390500	4	BPOS-04-AL	Mounting rail AL	G 1/4	12 mm
12390550	5	BPOS-05-AL	Mounting rail AL	G 1/4	12 mm
12390600	6	BPOS-06-AL	Mounting rail AL	G 1/4	12 mm

Pressure transmitter, switch, valve

Order number	Description
12385304	ASSEMBLY BPSG1-PTA
12393500	OS-PSA PRESSURE SWITCH
12385995	CLV-OS-24-NC VALVE

Sliding surface nozzles

Order number	Description
12802500	hollow bolt 40 mm for tube Ø6 mm
12802520	hollow bolt 70 mm for tube Ø6 mm
12802522	hollow bolt 120 mm for tube Ø6 mm

Felts

Order number	Description
12395360	50 mm felt, G1/8 inlet
12395365	150 mm felt, G1/8 inlet

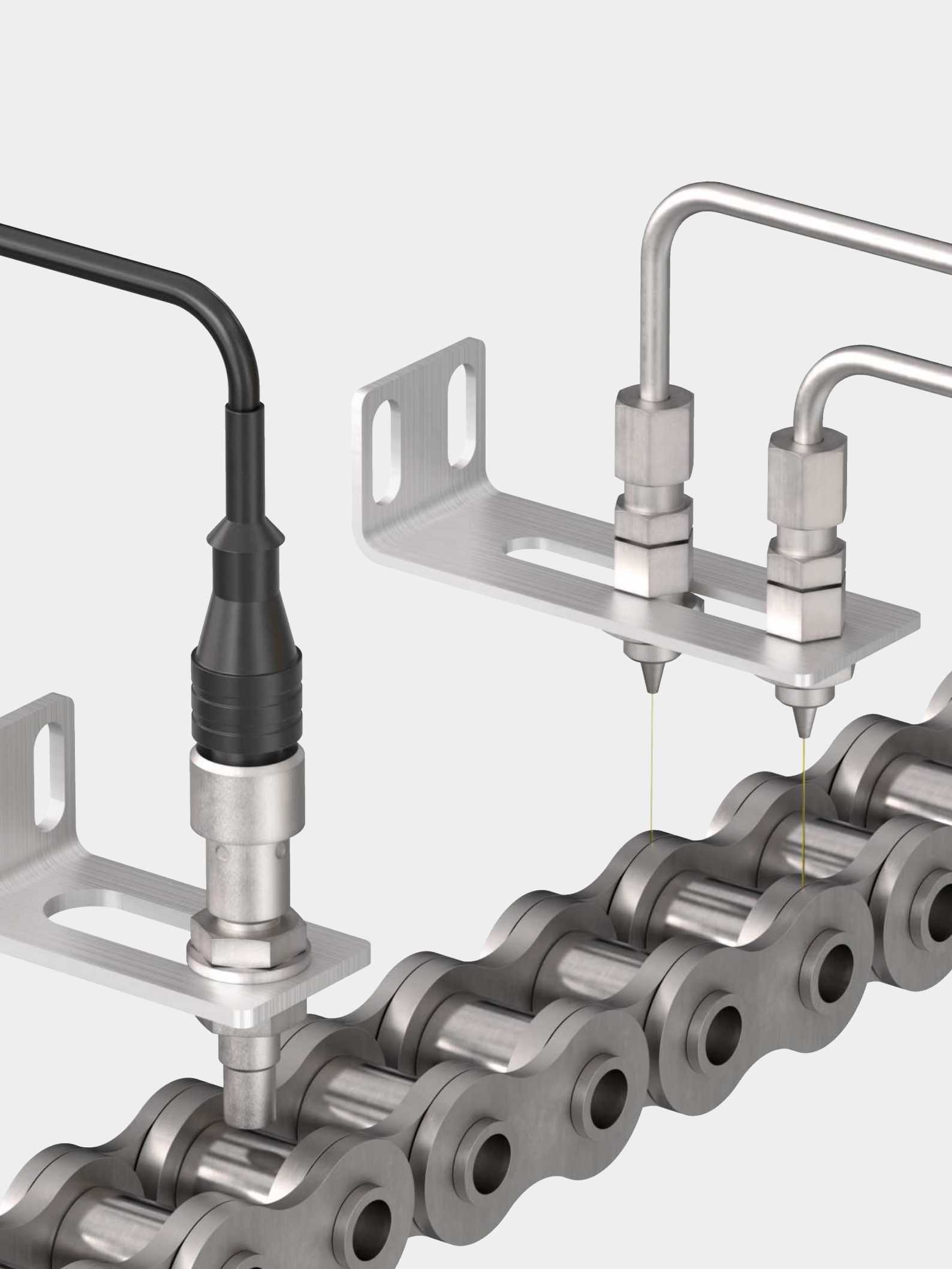

Oil projection lubrication systems

High precision and low oil consumption lubrication of roller chains and engineered chains

Automatic oil projection systems represent the most precise method for industrial chain lubrication. They deliver controlled amounts of lubricant directly to critical chain components through nozzles, helping to ensure uniform coverage and minimizing waste. This technology reduces wear, extends chain life, and supports high-speed or heavy-duty applications where accuracy and reliability are essential.

Advantages:

- Highest precision
- Clean and efficient
- Uniform lubricant coverage
- Contact-free = no component wear
- Adaptable to various chain sizes/speeds
- Consistent automatic lubrication
- Suitable for high-temperatures

Limitations:

- Oil viscosity
- System sizes
- Higher initial cost
- Quantity of chains
- Limited suitability for very dirty environments

For airless projection systems, oil viscosity plays a key role in ensuring accurate lubrication on chains, alongside factors such as chain dimensions, pitch-to-speed ratio, tube length, nozzle position, and ambient temperature. Generally, oils with a viscosity of up to 220–250 cSt at 40°C are suitable if conditions include a nozzle projecting downward within 15 mm of the chain, tube length under 4 meters, ambient temperature above 15°C, and a projection speed of no more than two per second. These guidelines are based on SKF's experience and should not be considered binding; in cases of higher speeds, larger dimensions, or lower temperatures, oils with lower viscosity and further evaluation under real operating conditions are recommended.

For a most reliable technical layout of oil projection systems, we recommend consulting SKF service technicians or authorized SKF distributors.



CL-501

- Air operated
- Number of (big) chains: max. 4 horizontal roller chains
- Viscosity max. 220 mm^2/s
- Oil application: nozzles (pitch by pitch projection)



CLK

- Electrically operated
- Viscosity max. 220 mm^2/s
- Number of chains: 1–2 horizontal roller chains
- Oil application: nozzles (pitch by pitch projection)

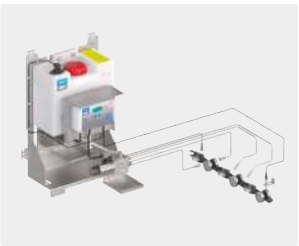

PFC

- Electrically operated
- Viscosity max. 1 000 mm^2/s
- Number of chains: 1–2 roller chains or engineered chains
- Oil application: nozzles (pitch by pitch projection)

Chain lubrication system CL-501

Air operated lubrication system for up to 4 parallel roller chains

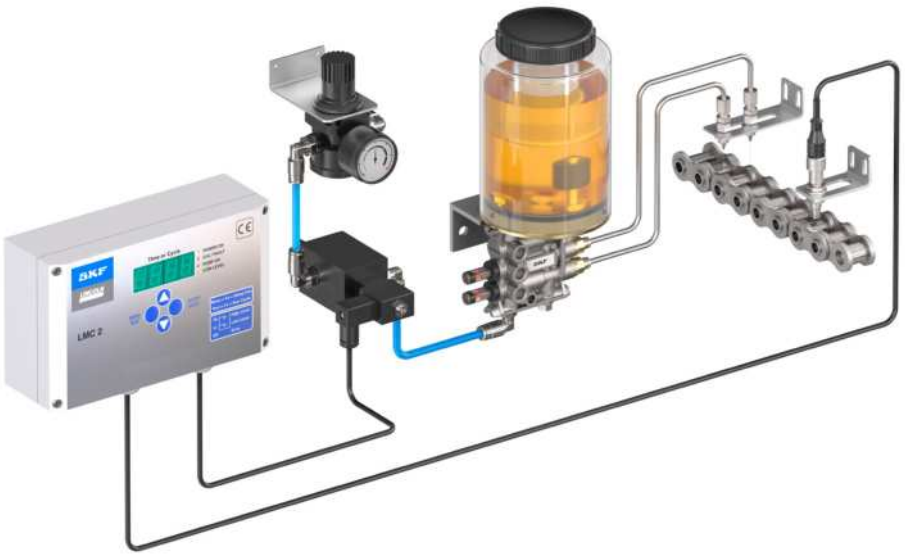

Features

- Compact design
- Up to 4 parallel chains
- 2–4 lubricant nozzles per chain
- Up to 2 oil injections per second
- For oil viscosity up to 220 mm²/s (cSt)

Benefits

- Eco-friendly: no oil in the exhaust air
- Highly precise splash lubrication
- Very low lubricant consumption
- Space saving design

Suitable for chains

- Roller chains with speed max. 2 links/s
- Chain pitch dimensions 50–250 mm

Description

The CL-501 projection system features a pneumatically driven compact plate mounted unit equipped with 1 to 8 metering piston pumps. Each pump delivers precisely adjustable oil volumes to airless projection nozzles, which apply lubrication ‘pitch by pitch’ to chain friction points with high accuracy, guided by proximity sensors detecting chain links. The system operates intermittently and is controlled via SKF’s LMC2 control unit or any external controller that processes sensor signals and actuates the air solenoid valve to synchronize pump operation. Contact-free technology eliminates applicator wear, while airless nozzles withstand temperatures up to 200 °C. With flexible configurations and easy expandability, this solution is ideal for a wide range of chain sizes and conveyor layouts, supporting lubrication of up to four chains.

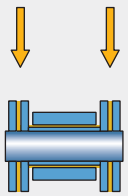

Small roller chains
- Plates thickness < 4 mm
- Chain pitch < 50 mm
- 2 lubricant nozzles

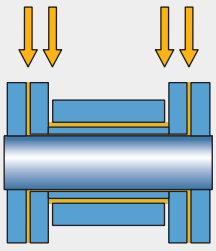

Medium and big roller chains
- Plates thickness > 4 mm
- Chain pitch > 50 mm
- 4 lubricant nozzles

Technical data

Function principle	air operated, precise injection, multi-line lubrication system with adjustable metering quantity	
Oil application method	oil projection via nozzles, pitch by pitch	
Lubricant	oil with 10 to 220 mm²/s	
Oil reservoir size	0.25; 1 or 1.80 l	*0.066; 0.26 or 0.47 gal*
Number of outlets	2, 4, 6 or 8	
Metering quantity/outlet	adj. 10–30 mm³/stroke	*adj. 0.0006–0.001 in³/stroke*
Actuation frequency	max. 2 Hz	
Lubricant line length	max. 0.5 m	
Operating temperature	–10 to +55 °C	*+14 to 131 °F*
Actuating air pressure	3 to 10 bar	*43 to 145 psi*
Air consumption at 6 bar	max. 200 l/min	*52.83 gal/min*
Mounting position (pump)	upright	
Mounting position (nozzles)	as shown in the image	

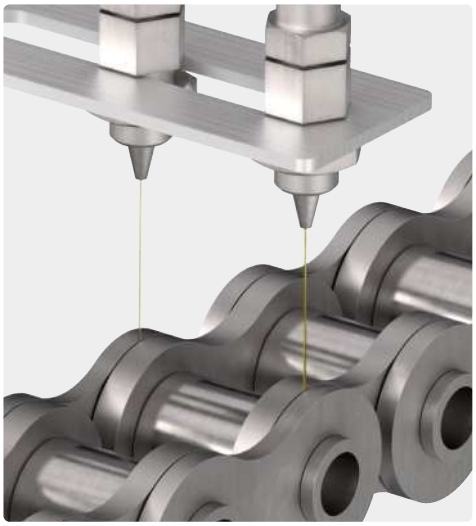



CL-501 system with injection oiler, air supply, solenoid valve and control unit (plate mounted)

Order number [1]	Number of outlets	Number of chains	Metering quantity (mm^3/stroke)	Connection outlet fitting	Seal material	Reservoir	Control unit [2]
7327-5000013	2	1	3–30	SKF Quick connector (4 mm)	NBR	0.25 l incl. level switch	LMC 2, 230 V
7327-5000014	4	2	3–30	SKF Quick connector (4 mm)	NBR	0.25 l incl. level switch	LMC 2, 230 V
7327-5000015	6	3	3–30	SKF Quick connector (4 mm)	NBR	0.25 l incl. level switch	LMC 2, 230 V
7327-5000016	8	1-3	3–30	SKF Quick connector (4 mm)	NBR	0.25 l incl. level switch	LMC 2, 230 V
7327-5000009	2	1	3–30	SKF Quick connector (4 mm)	NBR	0.8 l incl. level switch	LMC 2, 230 V
7327-5000010	4	2	3–30	SKF Quick connector (4 mm)	NBR	0.8 l incl. level switch	LMC 2, 230 V
7327-5000011	6	3	3–30	SKF Quick connector (4 mm)	NBR	0.8 l incl. level switch	LMC 2, 230 V
7327-5000012	8	1-3	3–30	SKF Quick connector (4 mm)	NBR	0.8 l incl. level switch	LMC 2, 230 V
7327-5000005	2	1	3–30	SKF Quick connector (4 mm)	NBR	1.8 l incl. level switch	LMC 2, 230 V
7327-5000006	4	2	3–30	SKF Quick connector (4 mm)	NBR	1.8 l incl. level switch	LMC 2, 230 V
7327-5000007	6	3	3–30	SKF Quick connector (4 mm)	NBR	1.8 l incl. level switch	LMC 2, 230 V
7327-5000008	8	1-3	3–30	SKF Quick connector (4 mm)	NBR	1.8 l incl. level switch	LMC 2, 230 V

1) Customized injection oiler and reservoir combinations available on request.
2) Detailed technical data of LMC 2 are availabe on SKF.com.

Nozzles and sensors

Order number	Description
AC-A-410	Oil projection nozzles incl. fitting
UCDE01-DPI-SC	Inductive proximity switch + 5 m cable with connectors + fixing support

Metal tubes (lubricant line)

Order number	Description
982-120-041+500	4 mm diameter tube, galvanized steel, inner diameter 2.6 mm, 0.5 m length
982-120-040+500	4 mm diameter tube, galvanized steel, inner diameter 2.0 mm, 0.5 m length

Chain lubrication kit CLK

Electrically operated lubrication system kit for up to 2 high-performance roller chains



Features

- For up to 2 roller chains
- 1–2 lubricant nozzles per chain
- Up to 2 oil injections per second
- For oil viscosity up to 220 mm^2/s (cSt)

Benefits

- Eco-friendly: no oil in the exhaust air
- Highly precise splash lubrication
- Kit solution with compact design
- Easy to install

Suitable for chains

- Roller chains with speed max. 7 links/s
- Chain pitch dimensions 50 to 250 mm

Description

The CLK 'all-in-one kit' projection system features an electrically driven pump unit with 2 or 4 outlets. Each outlet delivers pre-defined, precise oil volumes to airless projection nozzles that accurately target chain friction points. Operating intermittently, the integrated user-friendly control unit receives signals from chain link sensors and actuates the solenoid piston pump for pitch-by-pitch lubrication. Contact-free technology eliminates applicator wear, while airless nozzles withstand temperatures up to 200 °C. The corrosion-resistant, compact unit and complete accessory set make this solution ideal for conveyor systems with one or two high-value roller chains. Easy to install and operate, the CLK kit includes all components required for a full installation under a single part number - see the table of CLK variants.

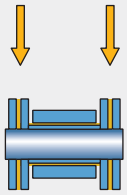

Small roller chains
- Plates thickness < 4 mm
- Chain pitch < 50 mm
- 2 lubricant nozzles

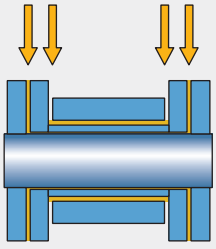

Medium and big roller chains
- Plates thickness > 4 mm
- Chain pitch > 50 mm
- 4 lubricant nozzles

Technical data

Function principle	electrically operated, multi-line lubrication system	
Oil application method	oil projection via nozzles, pitch by pitch	
Lubricant	mineral or synthetic oil without solid additives 10 to 220 m^2/s (cSt) at projection temperature	
Oil reservoir size	7,5 l	*2 gal*
Level monitoring	min. filling level switch	
Number of outlets	4	
Metering quantity/outlet	30 or 60 mm^3/stroke	*0.001–0.003 in^3/stroke*
Operating voltage	110 / 220 V AC, 50/60 Hz	
Protection class	IP65	
Operating temperature pump unit	0 to +60 °C	*+32 to 140 °F*
Operating temperature pipes and nozzles	max. 200 °C	*max. 400 °F*
Mounting position	upright	





CLK kits

Order number [1]	Metering quantity mm³/stroke	Number of outlets	Number of nozzles: Single nozzle	Double nozzle	Proximity switch ∅ in mm	Operating temperatures °C	°F	Pump voltage
CLK-460R-100+428	60	4	–	4	12	–40 to +85	*–40 to 30*	230 V AC, 50/60 Hz
CLK-260R-100+428	60	2	–	4	12	–40 to +85	*–40 to 30*	230 V AC, 50/60 Hz
CLK-460R-110+428	60	4	–	4	18	–20 to +180	*–28 to 82*	230 V AC, 50/60 Hz
CLK-430R-101+428	30	4	4	–	12	–40 to +85	*–40 to 30*	230 V AC, 50/60 Hz
CLK-430R-121+428	30	4	4	–	8	–40 to +85	*–40 to 30*	230 V AC, 50/60 Hz
CLK-460R-100+429	60	4	–	4	12	–40 to +85	*–40 to 30*	115 V AC, 50/60 Hz
CLK-260R-100+429	60	2	–	4	12	–40 to +85	*–40 to 30*	115 V AC, 50/60 Hz
CLK-460R-110+429	60	4	–	4	18	–20 to +180	*–28 to 82*	115 V AC, 50/60 Hz
CLK-430R-101+429	30	4	4	–	12	–40 to +85	*–40 to 30*	115 V AC, 50/60 Hz
CLK-430R-121+429	30	4	4	–	8	–40 to +85	*–40 to 30*	115 V AC, 50/60 Hz

1) For more detailed information on the different sets, please see the technical data.

Chain lubrication system PFC

Electrically operated, modular lubrication system for 1–2 forged, cardan and engineered chains

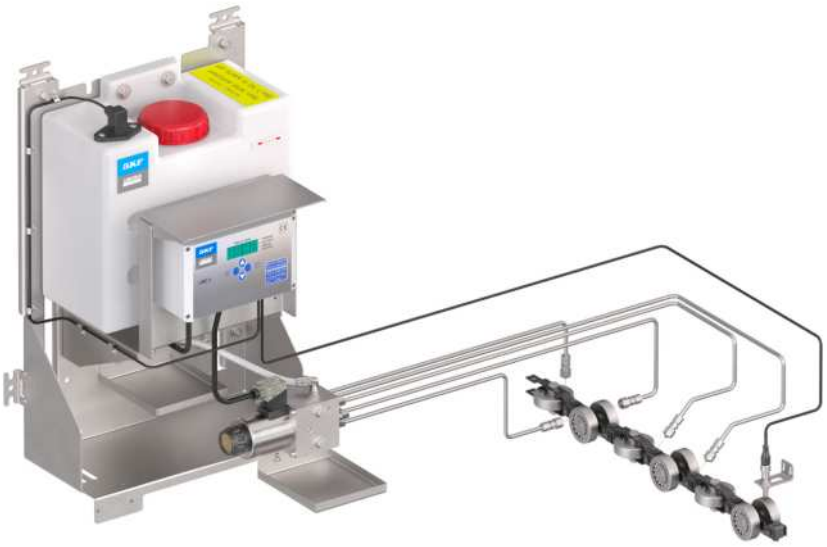

Features

- Up to 24 lubricant outlets/nozzles
- Highly precise splash lubrication
- For oil viscosity up to 220 mm^2/s (cSt)

Benefits

- Compact unit, easy to install
- Eco-friendly: no oil in the exhaust air
- Reliable lubrication solution

Suitable for chains

- Low speed, forged chains, cardan chains, engineered chains
- Low speed overhead conveyor chains

Description

The PFC projection system consists of 1 to 4 electrically driven pump units, each with 2 to 6 outlets. Every outlet delivers predefined, precise oil volumes to airless projection nozzles that accurately target chain friction points. Operating intermittently, the system uses a control unit that receives signals from chain link sensors and actuates the solenoid piston pumps for pitch-by-pitch lubrication. Contact-free airless projection technology eliminates applicator wear, while nozzles withstand temperatures up to 200°C. Its modular design offers extensive configuration options, including different reservoir sizes, pump quantities, outlet numbers, and control unit types, making it adaptable to virtually any conveyor or chain design. A selection of predefined PFC units is listed in the next table, and custom configurations can be developed upon request to meet specific needs.

The control unit LMC2 serves as the central controller for the SKF oil projection unit PFC, ensuring precise lubrication management. It is specifically designed to support cardan shafts and engineered chains. LMC2 is an electronic controller for managing and monitoring chain lubrication systems, featuring time- or cycle-dependent control and integration with common field bus systems. It offers 8 digital inputs, 5 outputs, IP54 protection, operates on 24 V DC or 230 V AC, and includes a compact enclosure with a user-friendly display for parameter settings.

Technical data

Function principle	electrically operated, multi-line lubrication system	
Oil application method	airless oil projection, pitch by pitch	
Lubricant		
PUMP.FC-1PEX...	Mineral oil or synthetic oil, 20 to 240 mm^2/s *	
PUMP.FC-1PMX...	Mineral oil or synthetic oil, 30 to 1 000 mm^2/s *	
Oil reservoir size	3.5 or 13 l (36 l on request); *0.92 or 3.4 gal (9.5 gal)*	
Level monitoring	low level (high- and low level on request)	
Number of outlets	2–6 (up to 24 on request)	
Metering quantity/outlet *	40 or 60 mm^3/stroke (20 or 30 mm^3/stroke on request)	
Metering frequency		
PUMP.FC-1PEX...	max. 2 Hz	
PUMP.FC-1PMX...	max. 3,3 Hz (230 V) or 4 Hz (24 V DC)	
Operating voltage	24 VDC or 230 V AC (115 V AC on request)	
Protection class	IP65	
Operating temperature		
PUMP.FC-1PEX...	–15 to 50 °C	*5 to 122 °F*
PUMP.FC-1PMX...	–20 to 60 °C	*–4 to 140 °F*
Mounting position	upright	

* The metering quantities depending on oil viscosity and system pressure.

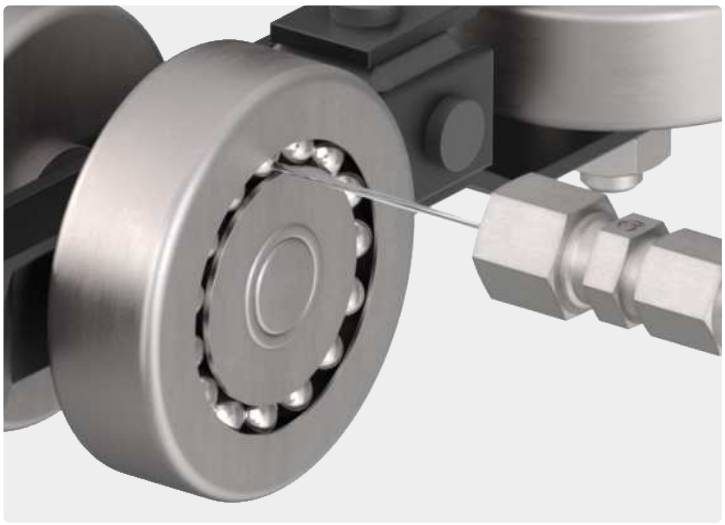

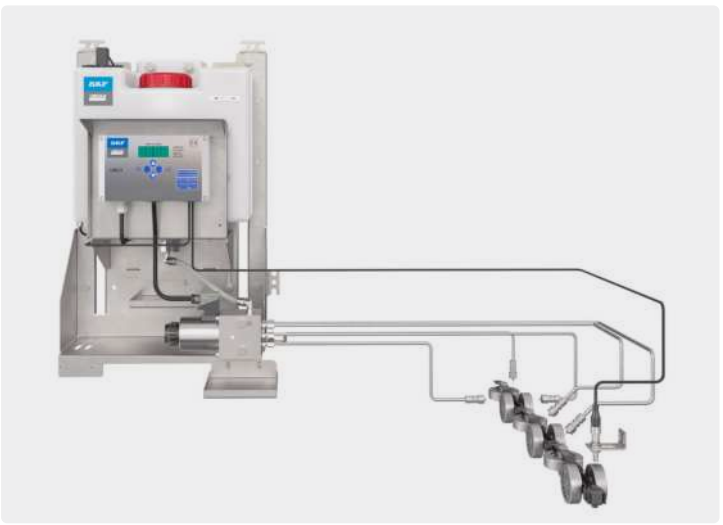

PFC units

Order number [1]	Designation	Number of pumps	Number of outlets	Metering quantity	Control unit	Reservoir size		Tube ∅	Industry
6343-70000011	PUMP.FC-1PEX-2XXX-4XXX-SL-W-1L+924	1	2	40 mm^3	LMC 2, 24 VDC	3,5 l	*0.9 gal*	4 mm	Automotive
6343-70000010	PUMP.FC-1PEX-4XXX-4XXX-SL-W-1L+924	1	4	40 mm^3	LMC 2, 24 VDC	3,5 l	*0.9 gal*	4 mm	Automotive
6343-70000009	PUMP.FC-1PEX-6XXX-4XXX-SL-W-1L+924	1	6	40 mm^3	LMC 2, 24 VDC	3,5 l	*0.9 gal*	4 mm	Automotive
6343-70000008	PUMP.FC-1PEX-2XXX-4XXX-SL-W-1L+428	1	2	40 mm^3	LMC 2, 230 VAC	3,5 l	*0.9 gal*	4 mm	Automotive
6343-70000007	PUMP.FC-1PEX-4XXX-4XXX-SL-W-1L+428	1	4	40 mm^3	LMC 2, 230 VAC	3,5 l	*0.9 gal*	4 mm	Automotive
6343-70000005	PUMP.FC-1PEX-6XXX-4XXX-SL-W-1L+428	1	6	40 mm^3	LMC 2, 230 VAC	3,5 l	*0.9 gal*	4 mm	Automotive
6510-70000006	PUMP.FC-1PMX-2XXX-6XXX-ML-W-1L+924	1	2	60 mm^3	LMC 2, 24 VDC	13 l	*3.4 gal*	6 mm	MMPC, Metal
6510-70000005	PUMP.FC-1PMX-4XXX-6XXX-ML-W-1L+924	1	4	60 mm^3	LMC 2, 24 VDC	13 l	*3.4 gal*	6 mm	MMPC, Metal
6510-70000004	PUMP.FC-1PMX-6XXX-6XXX-ML-W-1L+924	1	6	60 mm^3	LMC 2, 24 VDC	13 l	*3.4 gal*	6 mm	MMPC, Metal
6510-70000003	PUMP.FC-1PMX-2XXX-6XXX-ML-W-1L+428	1	2	60 mm^3	LMC 2, 230 VAC	13 l	*3.4 gal*	6 mm	MMPC, Metal
6510-70000002	PUMP.FC-1PMX-4XXX-6XXX-ML-W-1L+428	1	4	60 mm^3	LMC 2, 230 VAC	13 l	*3.4 gal*	6 mm	MMPC, Metal
6510-70000001	PUMP.FC-1PMX-6XXX-6XXX-ML-W-1L+428	1	6	60 mm^3	LMC 2, 230 VAC	13 l	*3.4 gal*	6 mm	MMPC, Metal

1) For more detailed information on the different PFC unit designs, please see the technical data.

Nozzles and sensors

Order number	Description
AC-A-410	Oil projection nozzles incl. fitting
615-28660-3	Oil spray nozzle szdy-03
UCDE01-DPI-SC	Inductive proximity switch + 5 m cable with connectors + fixing support

Metal tubes (lubricant line)

Order number	Description
982-120-041	4 mm diameter tube, galvanized steel, inner diameter 2.6 mm, 1 m length (max. line length 5 m)
982-120-040	4 mm diameter tube, galvanized steel, inner diameter 2.0 mm, 1 m length (max. line length 5 m)
982-120-061	6 mm diameter tube, galvanized steel, inner diameter 4.6 mm, 1 m length (max. line length 5 m)
105-35251-1	6 mm diameter tube, galvanized steel, inner diameter 4.0 mm, 1 m length (max. line length 5 m)



Air assisted oil spraying (droplets) lubrication systems

High efficiency and low oil consumption lubrication systems for fast running roller chains

Automatic air assisted oil droplet projection systems represent the most reliable lubrication method for fast and very fast industrial chains. They deliver defined amounts of lubricant droplets directly to the chain through nozzles, helping to ensure very good coverage. This technology reduces wear, extends chain life, and supports high-speed applications when contact-free lubrication is required.

Advantages:

- Very good lubricant coverage
- Contact-free = no component wear
- Adaptable to various chain sizes/speeds
- Consistent automatic lubrication
- Suitable for high-speed chains

Limitations:

- Oil viscosity
- Higher initial cost
- Quantity of chains
- Limited suitability for slow running chains

Oil droplet projection chain lubrication systems use compressed air to deliver precisely metered micro-droplets of oil (200–600 µm) directly onto chain friction points, ensuring efficient and contact-free lubrication. These systems are compatible with a wide range of oils and are designed for minimal maintenance, as the nozzles do not wear out due to their contact-free operation.

Adjustable dosing and modular configurations allow them to suit various chain sizes and conveyor setups, from small, high-speed roller chains to larger conveyor and cardan chains. The systems can operate in continuous or pulsed modes, providing reliable lubrication even under demanding conditions, and their robust design supports easy integration with different control systems.

Overall, they offer precise, minimal lubrication that reduces oil consumption, extends chain life, and minimizes downtime.

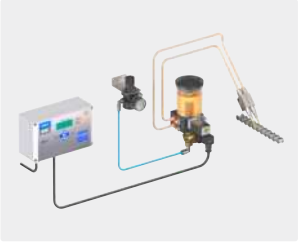

CL-VE1B

- Air operated
- Viscosity max. 400 mm^2/s
- Number of chains: max. 2
- Oil application: continuous droplet projection



CL-VTEC

- Air operated
- Viscosity max. 400 mm^2/s
- Number of chains: max. 6
- Oil application: continuous droplet projection



ORSCO VSR

- Air operated
- Viscosity max. 400 mm^2/s
- Oil application: pulsed or continuous droplet projection



ORSCO Series 170

- Air operated incl. controller
- Viscosity max. 400 mm^2/s
- Oil application: pulsed or continuous droplet projection

Chain lubrication system CL-VE1B

Air operated lubrication system for up to 2 small, high-speed roller chains



Features

- For up to 2 roller chains
- Microdroplets projection through adjustable air flow via projection nozzles
- Adjustable micro doses of oil with metering piston pumps
- For oil viscosity up to 400 mm^2/s (cSt)

Benefits

- Very long lasting contact free solution with no wear of oil applicators
- Compact design, easy to set-up
- Easily adaptable and easy to use

Suitable for chains

- Roller chains, small size and high speed
- Chain pitch dimensions of 50–250 mm

Description

The CL-VE1B projection system consists of a pneumatically driven unit equipped with 1 to 4 metering piston pumps. Each pump delivers precisely adjustable oil volumes combined with a regulated air flow to projection nozzles, creating fine droplets that targets chain friction points. The system operates intermittently and can be controlled via SKF's LMC2 control unit or any external controller. Its contact-free technology eliminates applicator wear, while the wide range of configuration options makes it ideal for various chain sizes and conveyor setups, supporting lubrication of up to four chains.

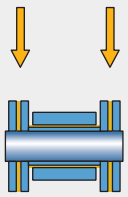

Small roller chains
- Plates thickness < 4 mm
- Chain pitch < 50 mm
- 2 lubricant nozzles

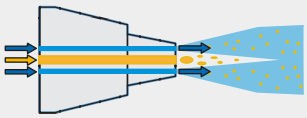

Coaxial nozzles
- Oil and air becomes mixed within the nozzle and generate small microdroplets (200 to 600 µm)

Technical data

Function principle	air operated, micro dosage, multi-line lubrication system with adjustable metering quantity	
Oil application method	oil (micro) droplet projection (200 to 600 µm)	
Lubricant	mineral, synthetic or biodegradable oils, oil viscosity 10 to 400 mm^2/s	
Operating temperature	10 to 50 °C	*50 to 122 °F*
Oil reservoir size	0.3 l (transparent with an output filter); *0.079 gal*	
Number of outlets	1–4	
Metering quantity/outlet [1]	adjustable 5, 10, 15, 20, 30 mm^3/stroke	
Air supply pressure	5 to 8 bar	*72.5 to 116 psi*
Pump stroke frequency	adjustable from 0.166 to 3 Hz (1 stroke per 6 seconds – 3 strokes per second)	
Protection class	IP54	
Mounting position (pump)	upright	
Mounting position (nozzles)	as shown in the image	

1) Customized VE1B designs can have metering quantities of up to 90 mm^3/stroke.



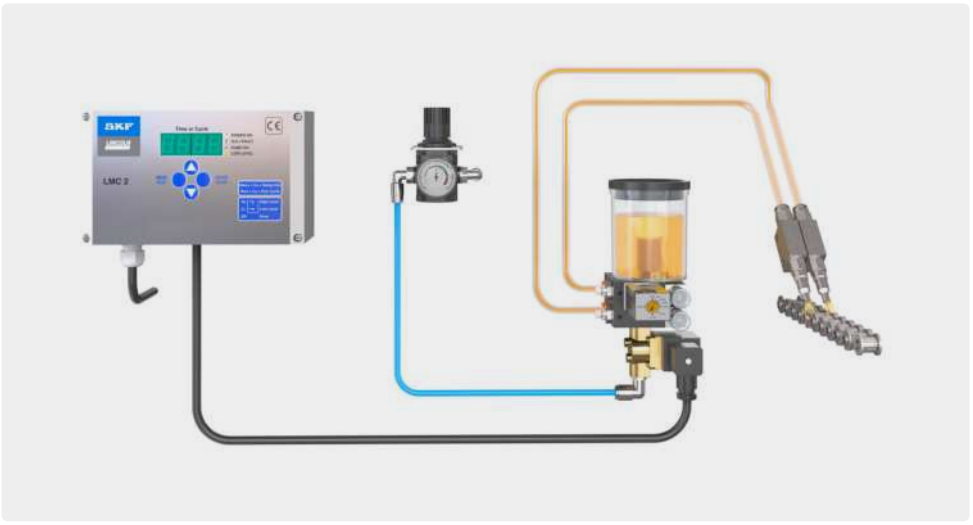

VE1B, adjustable micro dosage oil pump unit

Order number *	Number of outlets	Metering quantity (mm^3/stroke)	Connection outlet fitting	Seal material	Reservoir
VE1B-PA1-10	1 outlet	5–30, adjustable	Quick connectors for coaxial tubes	FKM	0.3 litre
VE1B-PA2-10	2 outlets	5–30, adjustable	Quick connectors for coaxial tubes	FKM	0.3 litre
VE1B-PA3-10	3 outlets	5–30, adjustable	Quick connectors for coaxial tubes	FKM	0.3 litre
VE1B-PA4-10	4 outlets	5–30, adjustable	Quick connectors for coaxial tubes	FKM	0.3 litre
MOD-1011	Mounting rail kit for VE1B units with screws and clips				

* Further customized VE1B designs available on request.

Air supply/actuation system

Order number	Description
231-900-028	Air pressure regulating valve
231-900-028.U1	Air pressure regulating valve including filter and water separator
MOD-1016+428	2/2 way solenoid air control valve, 230 V AC, normally closed (NC)
MOD-1016+924	2/2 way solenoid air control valve, 24 V DC, normally closed (NC)

Plastic tubes

Order number	Description
Coaxial plastic tube components	
TU-5.5X8-PON	plastic tubes Ø8 mm (by meter) - black
TU-2.2X3.2-RLN *	plastic tubes Ø3.2 mm (by meter) - black
Premounted coaxial tubes with metal braid outer protection	
F12-C2-F1000	premounted coaxial tubes Ø8/Ø3.2 mm, 1 m
F12-C2-F2000	premounted coaxial tubes Ø8/Ø3.2 mm, 2 m
F12-C2-F3000	premounted coaxial tubes Ø8/Ø3.2 mm, 3 m
F12-C2-F4000	premounted coaxial tubes Ø8/Ø3.2 mm, 4 m
F12-C2-F5000	premounted coaxial tubes Ø8/Ø3.2 mm, 5 m

* When connecting a nozzle, the oil tube No. TU-2.2X3.2-RLN must be 700 mm longer than the air tube No. TU-5.5X8-PON

Nozzles

Order number	Description
AC-3539-C2	straight, round jet nozzle block
AC-3659-C2	90° angled, round jet nozzle block
AC-3184-C2	straight, Ø8 mm copper tube extension (250 mm) nozzle
AC-3657-C2	90° angled, Ø8 mm copper tube extension (250 mm) nozzle

System controller

Order number	Description *
236–10567–6	LMC 2; 230 AC (230 V AC)
236–10567–5	LMC 2; 24 DC (24 V DC)

* Detailed technical data of LMC 2 are availabe on SKF.com.

Chain lubrication system CL-VTEC

Air operated lubrication system for up to 6 high-speed roller chains

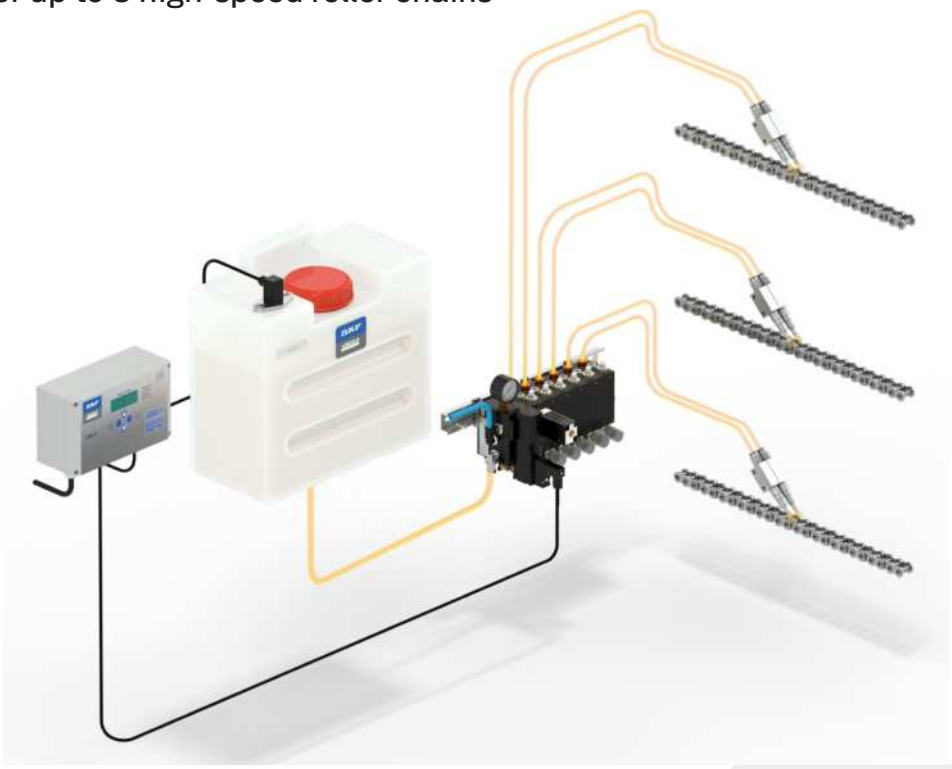

Features

- For up to 6 roller chains
- Microdroplets projection through adjustable air flow via projection nozzles
- Adjustable micro doses of oil with metering piston pumps
- For oil viscosity up to 400 mm^2/s (cSt)

Benefits

- Very long lasting contact free solution with no wear of oil applicators
- Compact design, easy to set-up
- Easily adaptable and easy to use

Suitable for chains

- Roller chains, small size and high-speed
- Chain pitch dimensions of 50–250 mm

Description

CL-VTEC oil spraying system is an air operated, very modular minimal quantity lubrication solution designed for precise oil dosing in high-speed applications. It uses compressed air to deliver micro-quantities of mineral or synthetic oils directly to chain links, ensuring optimal lubrication with minimal consumption. The system supports adjustable dosing from 3 to 90 mm^3 per impulse, making it ideal for fast-running roller chains in conveyor systems. Its controlled lubrication reduces wear, improves efficiency, and extends chain life even under demanding operating conditions.

Technical data

Function principle	air operated, micro dosage, multi-line lubrication system with adjustable metering quantity	
Oil application method	oil (micro) droplet projection (200 to 600 µm)	
Lubricant	mineral, synthetic or biodegradable oils, oil viscosity 10 to 400 mm^2/s	
Operating temperature	10 to 50 °C	*50 to 122 °F*
Oil reservoir size	0.3 l (transparent with an output filter); *0.079 gal*	
Number of outlets	1–12	
Metering quantity/outlet	adjustable 3–90 mm^3	
Air supply pressure	5 to 8 bar	*72.5 to 116 psi*
Pump stroke frequency	adjustable from 0.166 to 3 Hz (1 stroke per 6 seconds – 3 strokes per second)	
Protection class	IP54	
Mounting position (pump)	upright	
Mounting position (nozzles)	as shown in the image	

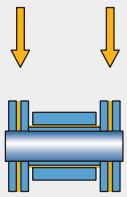

Small roller chains
- Plates thickness < 4 mm
- Chain pitch < 50 mm
- 2 lubricant nozzles

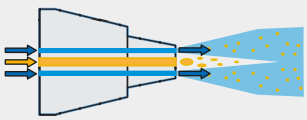

Coaxial nozzles
- Oil and air becomes mixed within the nozzle and generate small microdroplets (200 to 600 µm)



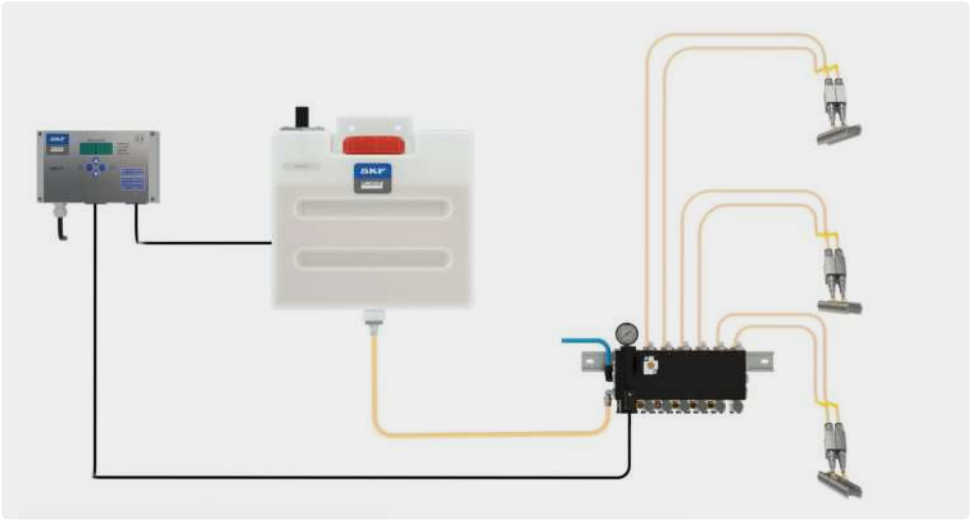

VTEC, adjustable micro dosage oil pump unit

Order number *	Designation	Number of outlets	Metering quantity (mm^3/stroke)	Voltage	Seal material
6840-00000062	VTEC-IZM-BAZ-AAZ-AAZ-AAZ-AAZ-AAZ+924	6	3–30, adjustable	24V DC	FKM
6840-00000063	VTEC-IZM-BAZ-AAZ-AAZ-AAZ-AAZ-AAZ-AAZ+924	8	3–30, adjustable	24V DC	FKM
6840-00000064	VTEC-IZM-BAZ-AAZ-AAZ-AAZ-AAZ-BAZ-AAZ-AAZ-AAZ-AAZ+924	10	3–30, adjustable	24V DC	FKM
6840-00000065	VTEC-IZM-BAZ-AAZ-AAZ-AAZ-AAZ-AAZ-BAZ-AAZ-AAZ-AAZ-AAZ-AAZ+924	12	3–30, adjustable	24V DC	FKM
6840-00000066	VTEC-IZM-BEZ-AEZ-AEZ-AEZ-AEZ-AEZ+924	6	30–90, adjustable	24V DC	FKM
6840-00000067	VTEC-IZM-BEZ-AEZ-AEZ-AEZ-AEZ-AEZ-AEZ-AEZ+924	8	30–90, adjustable	24V DC	FKM
6840-00000068	VTEC-IZM-BEZ-AEZ-AEZ-AEZ-AEZ-BEZ-AEZ-AEZ-AEZ-AEZ+924	10	30–90, adjustable	24V DC	FKM
6840-00000069	VTEC-IZM-BEZ-AEZ-AEZ-AEZ-AEZ-AEZ-BEZ-AEZ-AEZ-AEZ-AEZ-AEZ+924	12	30–90, adjustable	24V DC	FKM

* Further customized VTEC designs available on request.

Air supply/actuation system

Order number	Description
231-900-028	Air pressure regulating valve
231-900-028.U1	Air pressure regulating valve including filter and water separator

Nozzles

Order number	Description
AC-3539-C2	straight, round jet nozzle block
AC-3659-C2	90° angled, round jet nozzle block
AC-3184-C2	straight, Ø8 mm copper tube extension (250 mm) nozzle
AC-3657-C2	90° angled, Ø8 mm copper tube extension (250 mm) nozzle

System controller

Order number	Description *
236–10567–6	LMC 2; 230 AC (230 V AC)
236–10567–5	LMC 2; 24 DC (24 V DC)

* Detailed technical data of LMC 2 are availabe on SKF.com.

Plastic tubes

Order number	Description
Coaxial plastic tube components	
TU-5.5X8-PON	plastic tubes Ø8 mm (by meter) - black
TU-2.2X3.2-RLN *	plastic tubes Ø3.2 mm (by meter) - black
Premounted coaxial tubes with metal braid outer protection	
F12-C2-F1000	premounted coaxial tubes Ø8/Ø3.2 mm, 1 m
F12-C2-F2000	premounted coaxial tubes Ø8/Ø3.2 mm, 2 m
F12-C2-F3000	premounted coaxial tubes Ø8/Ø3.2 mm, 3 m
F12-C2-F4000	premounted coaxial tubes Ø8/Ø3.2 mm, 4 m
F12-C2-F5000	premounted coaxial tubes Ø8/Ø3.2 mm, 5 m

* When connecting a nozzle, the oil tube No. TU-2.2X3.2-RLN must be 700 mm longer than the air tube No. TU-5.5X8-PON

Reservoirs

Order number	Description
MOD-031-NC	Oil reservoir (3,3 l) made of PA6, incl. level switch (NC) and Ø6 mm plastic (3 m) and quick connector fittings, reservoir mounting screws

Chain lubrication system ORSCO VSR

Air operated lubrication system for up to 4 small, slow to high-speed roller chains, cardan chains and conveyor chains

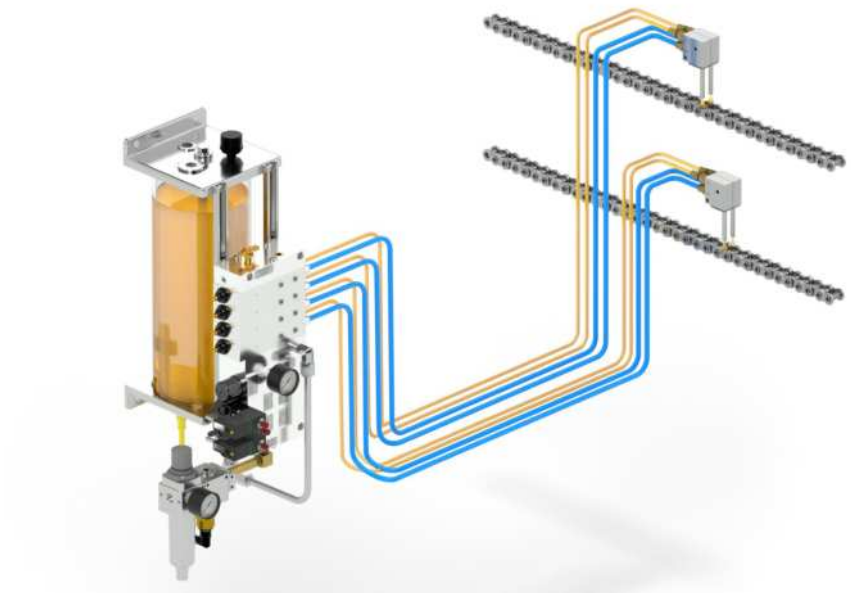

Features

- For up to 4 roller chains
- Precise lubricant volume delivery
- Adjustable micro doses of oil
- NEMA rated enclosures available
- For oil viscosity 20 to 400 mm²/s (cSt)

Benefits

- Simple and robust
- Oil spray does not fog
- Over 25 years of reliable service history

Suitable for chains

- Chains with small size and high speed
- Roller, cardan and conveyor chains

Description

The ORSCO VSR air/oil spray system is a compact air-operated chain lubrication solution designed for applications with existing machine controls. Pneumatically driven fixed-displacement injectors deliver oil to the nozzles, where it is introduced into a regulated air stream and mixed within the nozzle body to produce a micro-droplet spray at the tip. The system can run continuously for fast-moving chains or operate in a pulsed mode for slower chains. The nozzles withstand temperatures up to 149 °C (*300 °F*). Being contact-free, the nozzles are also virtually maintenance-free.

The system's modular design - with multiple reservoirs, injector sizes, nozzle configurations, power options, and variable injector quantities - allows custom setups to be created on request for almost any chain or specialized application. [1)]

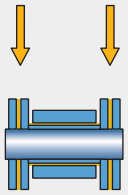

Small roller chains
- Plates thickness < 4 mm
- Chain pitch < 50 mm
- 2 lubricant nozzles

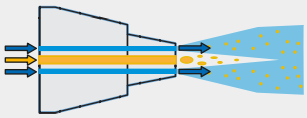

Mixing nozzles
- Oil and air becomes mixed within the nozzle and generate small microdroplets (200 to 600 µm)

Technical data

Function principle	air operated, multi-point oil spraying system with adjustable lubricant delivery quantity	
Oil application method	oil/air via nozzles, continuous or pitch-by-pitch spray	
Lubricant	mineral, synthetic or biodegradable oils, oil viscosity 20 to 400 mm²/s	
Operating temperature		
Pump unit	–30 to 50 °C	*–20 to 120 °F*
Nozzle	–20 to 150 °C	*–15 to 300 °F*
Oil reservoir size	4 or 16 l (transparent with an output filter); *1 or 4 gal*	
Number of outlets	2 to 8	
Metering quantity/outlet	non-adjustable 15 and 60 mm³/outlet; adjustable [2)] 15 and 60 mm³/outlet	
Air supply pressure	5 to 7 bar	*70 to 100 psi*
Air consumption per nozzle	0.0212 m³/min	*0.75 CFM*
Actuation frequency	< 1 pitch/second, pulsed *> 1 pitch/second, continuous*	
Lubricant line length	7,5 m (*25 feet*), pulsed 15 m (*50 feet*), continuous	
Mounting position (pump)	upright	
Mounting position (nozzles)	application specific	

1) Lincoln ORSCO VSR models are not CE-approved and may only be used outside the EU.
2) Adjustable injectors available on request.

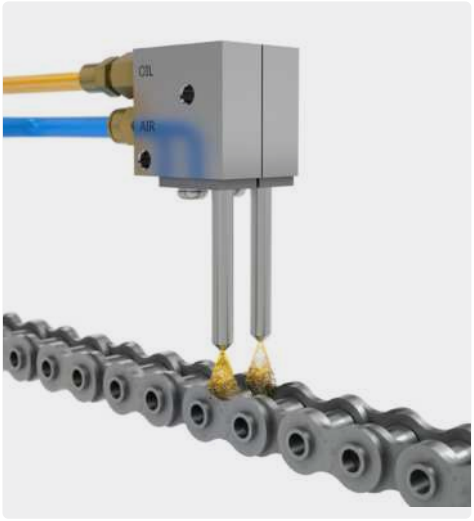

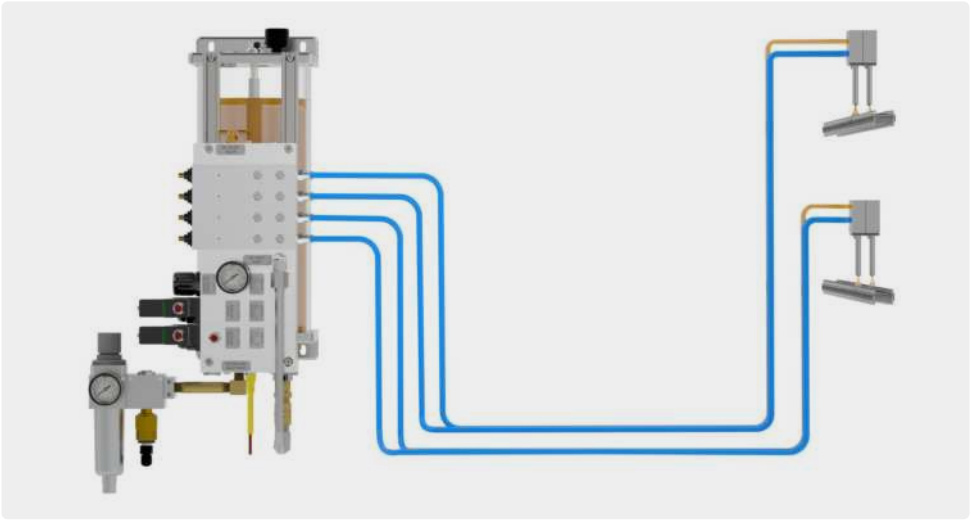

ORSCO VSR assembly for continuous spraying

Order number	Number of outlets	Metering quantity (mm^3/stroke)	Reservoir	Operating voltage	Air tube Ø inch	Oil tube Ø inch	Tubing included
VSRASH2X1ILNYM	2	15	4 l incl. level switch	115 VAC 50/60 Hz	1/4	3/16	16 m
VSRASH4X1ILNYM	4	15	4 l incl. level switch	115 VAC 50/60 Hz	1/4	3/16	32 m
VSRASH8X1ILNYM	8	15	4 l incl. level switch	115 VAC 50/60 Hz	1/4	3/16	64 m
VSRAST2X1ILNYM	2	60	4 l incl. level switch	115 VAC 50/60 Hz	1/4	3/16	16 m
VSRAST4X1ILNYM	4	60	4 l incl. level switch	115 VAC 50/60 Hz	1/4	3/16	32 m
VSRAST8X1ILNYM	8	60	4 l incl. level switch	115 VAC 50/60 Hz	1/4	3/16	64 m
VSRBSH2X1ILNYM	2	15	4 l incl. level switch	230 VAC 50/60 Hz	1/4	3/16	16 m
VSRBSH4X1ILNYM	4	15	4 l incl. level switch	230 VAC 50/60 Hz	1/4	3/16	32 m
VSRBSH8X1ILNYM	8	15	4 l incl. level switch	230 VAC 50/60 Hz	1/4	3/16	64 m
VSRBST2X1ILNYM	2	60	4 l incl. level switch	230 VAC 50/60 Hz	1/4	3/16	16 m
VSRBST4X1ILNYM	4	60	4 l incl. level switch	230 VAC 50/60 Hz	1/4	3/16	32 m
VSRBST8X1ILNYM	8	60	4 l incl. level switch	230 VAC 50/60 Hz	1/4	3/16	64 m
VSRDSH2X1ILNYM	2	15	4 l incl. level switch	24 VDC	1/4	3/16	16 m
VSRDSH4X1ILNYM	4	15	4 l incl. level switch	24 VDC	1/4	3/16	32 m
VSRDSH8X1ILNYM	8	15	4 l incl. level switch	24 VDC	1/4	3/16	64 m
VSRDST2X1ILNYM	2	60	4 l incl. level switch	24 VDC	1/4	3/16	16 m
VSRDST4X1ILNYM	4	60	4 l incl. level switch	24 VDC	1/4	3/16	32 m
VSRDST8X1ILNYM	8	60	4 l incl. level switch	24 VDC	1/4	3/16	64 m

ORSCO VSR assembly for pulsed spraying

Order number	Number of outlets	Metering quantity (mm^3/stroke)	Reservoir	Operating voltage	Air tube Ø mm	Oil tube Ø mm	Tubing included
VSRASH2X1ILMPM	2	15	4 l incl. level switch	115 VAC 50/60 Hz	6	4	16 m
VSRASH4X1ILMPM	4	15	4 l incl. level switch	115 VAC 50/60 Hz	6	4	32 m
VSRASH8X1ILMPM	8	15	4 l incl. level switch	115 VAC 50/60 Hz	6	4	64 m
VSRAST2X1ILMPM	2	60	4 l incl. level switch	115 VAC 50/60 Hz	6	4	16 m
VSRAST4X1ILMPM	4	60	4 l incl. level switch	115 VAC 50/60 Hz	6	4	32 m
VSRAST8X1ILNYM	8	60	4 l incl. level switch	115 VAC 50/60 Hz	6	4	64 m
VSRBSH2X1ILMPM	2	15	4 l incl. level switch	230 VAC 50/60 Hz	6	4	16 m
VSRBSH4X1ILMPM	4	15	4 l incl. level switch	230 VAC 50/60 Hz	6	4	32 m
VSRBSH8X1ILMPM	8	15	4 l incl. level switch	230 VAC 50/60 Hz	6	4	64 m
VSRBST2X1ILMPM	2	60	4 l incl. level switch	230 VAC 50/60 Hz	6	4	16 m
VSRBST4X1ILMPM	4	60	4 l incl. level switch	230 VAC 50/60 Hz	6	4	32 m
VSRBST8X1ILMPM	8	60	4 l incl. level switch	230 VAC 50/60 Hz	6	4	64 m
VSRDSH2X1ILMPM	2	15	4 l incl. level switch	24 VDC	6	4	16 m
VSRDSH4X1ILMPM	4	15	4 l incl. level switch	24 VDC	6	4	32 m
VSRDSH8X1ILNYM	8	15	4 l incl. level switch	24 VDC	6	4	64 m
VSRDST2X1ILNYM	2	60	4 l incl. level switch	24 VDC	6	4	16 m
VSRDST4X1ILNYM	4	60	4 l incl. level switch	24 VDC	6	4	32 m
VSRDST8X1ILNYM	8	60	4 l incl. level switch	24 VDC	6	4	64 m

Nozzles

Order number	Description	Air tube Ø	Oil tube Ø
SWN-IL-NY-00-2	straight, in-line, 2 in. tip nozzle	1/4 in.	3/16 in.
SWN-LP-NY-00-2	straight, low-profile, 2 in. tip nozzle	1/4 in.	3/16 in.
TPN-IL-MP-00-2	straight, in-line 2 in. tip nozzle	6 mm	4 mm
TPN-LP-MP-00-2	straight, low-profile 2 in. tip nozzle	6 mm	4 mm

Supports and proximity switch

Order number	Description
250-10316	mounting bracket for SWN-IL-NY-00-2 nozzle
250-10136	mounting bracket for SWN-LP-NY-00-2 nozzle
250-06319	mounting bracket for TPN nozzles
UCDE01-DPI-SC	inductive proximity switch incl. 5 m cable + fixing support

Chain lubrication system ORSCO Series 170

Air operated lubrication system for small to large size, slow to high-speed roller chains, cardan chains and conveyor chains

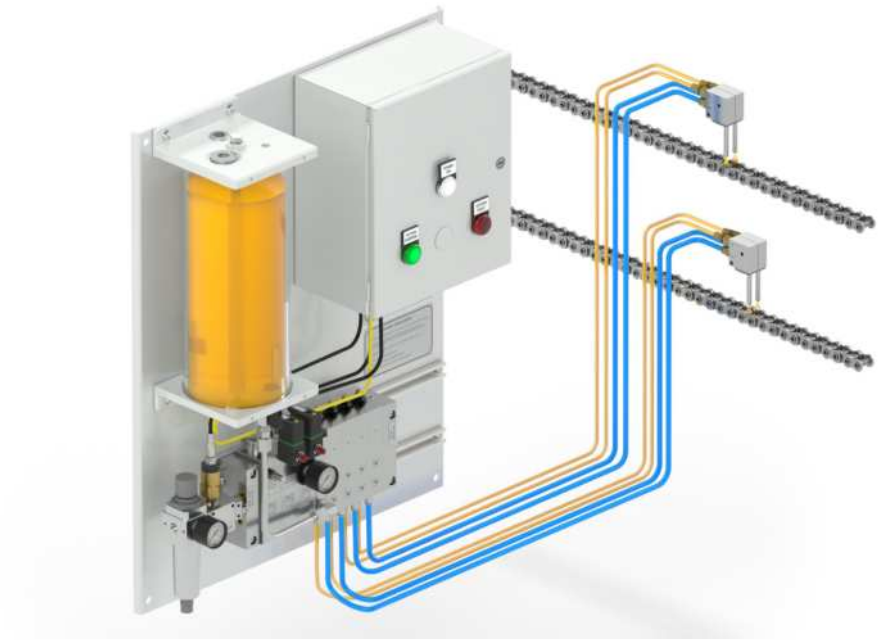

Features

- Precise lubricant volume delivery
- Autofill shut-off system available
- NEMA rated enclosures available
- For oil viscosity up to 400 mm^2/s (cSt)

Benefits

- Simple and robust
- Oil spray does not fog
- Over 25 years of reliable service history

Suitable for chains

- Chains from small to large size and slow to fast speed
- Roller, cardan and conveyor chains

Description

The ORSCO Series 170 air/oil spray system is a compact, air-operated chain lubrication solution for applications with or without machine controls. A controller manages system ON/OFF time, lubrication duration and volume, monitors air pressure and oil level, and sends fault signals. Pneumatically driven fixed-displacement injectors deliver oil to the nozzles, where it mixes with regulated air to create a micro-droplet spray. The system can run continuously for fast chains or in pulsed mode for slower ones. Nozzles withstand temperatures up to 149 °C (300 °F) and, being contact-free, require virtually no maintenance. The modular design - with multiple reservoirs, injector sizes, nozzle configurations, power options, and variable injector quantities - allows custom setups for almost any chain or specialized application. [1)]

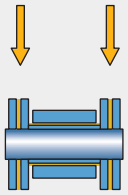

Small roller chains
- Plates thickness < 4 mm
- Chain pitch < 50 mm
- 2 lubricant nozzles

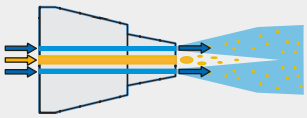

Mixing nozzles
- Oil and air becomes mixed within the nozzle and generate small microdroplets (200 to 600 µm)

Technical data

Function principle	air operated, multi-point oil spraying system with adjustable lubricant delivery quantity	
Oil application method	oil/air via nozzles, continuous or pitch-by-pitch spray	
Lubricant	mineral, synthetic or biodegradable oils, oil viscosity 20 to 400 mm^2/s	
Operating temperature		
Pump unit	–30 to 50 °C	*–20 to 120 °F*
Nozzle	–20 to 150 °C	*–15 to 300 °F*
Oil reservoir size	4 or 16 l (transparent with an output filter); *1 or 4 gal*	
Number of outlets	2 to 8	
Metering quantity/outlet	non-adjustable 15 and 60 mm^3/outlet; adjustable [2)] 15 – 60 mm^3/outlet	
Air supply pressure	5 to 7 bar	*70 to 100 psi*
Air consumption per nozzle	0.0212 m^3/min	*0.75 CFM*
Actuation frequency	< 1 pitch/second, pulsed *> 1 pitch/second, continuous*	
Lubricant line length	7,5 m (*25 feet*), pulsed 15 m (*50 feet*), continuous	
Mounting position (pump)	upright	
Mounting position (nozzles)	application specific	

1) Lincoln Orsco Series 170 models are not CE-approved and may only be used outside the EU.
2) Adjustable injectors available on request.

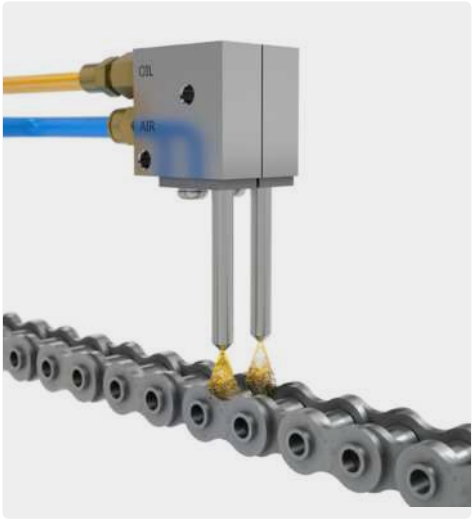

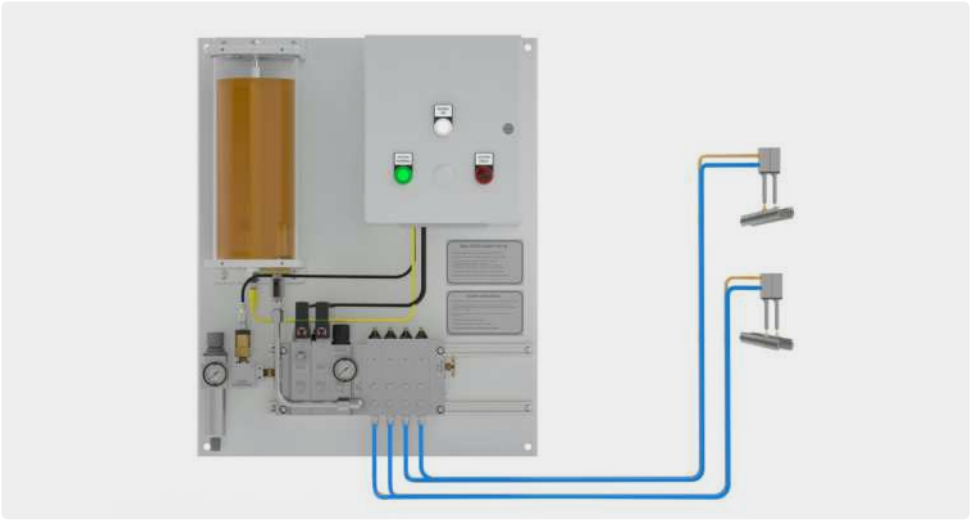

ORSCO Series 170 assembly for continuous spraying

Order number	Number of outlets	Metering quantity (mm^3/stroke)	Reservoir	Operating voltage	Air tube Ø inch	Oil tube Ø inch	Tubing included
170A1PS020000HMNYCX	2	15	4 l incl. level switch	115 VAC 50/60 Hz	1/4	3/16	16 m (each)
170A1PS040000HMNYCX	4	15	4 l incl. level switch	115 VAC 50/60 Hz	1/4	3/16	32 m (each)
170A1PS080000HMNYCX	8	15	4 l incl. level switch	115 VAC 50/60 Hz	1/4	3/16	64 m (each)
170A1PS020000TMNYCX	2	60	4 l incl. level switch	115 VAC 50/60 Hz	1/4	3/16	16 m (each)
170A1PS040000TMNYCX	4	60	4 l incl. level switch	115 VAC 50/60 Hz	1/4	3/16	32 m (each)
170A1PS080000TMNYCX	8	60	4 l incl. level switch	115 VAC 50/60 Hz	1/4	3/16	64 m (each)
170B1PS020000HMNYCX	2	15	4 l incl. level switch	230 VAC 50/60 Hz	1/4	3/16	16 m (each)
170B1PS040000HMNYCX	4	15	4 l incl. level switch	230 VAC 50/60 Hz	1/4	3/16	32 m (each)
170B1PS080000HMNYCX	8	15	4 l incl. level switch	230 VAC 50/60 Hz	1/4	3/16	64 m (each)
170B1PS020000TMNYCX	2	60	4 l incl. level switch	230 VAC 50/60 Hz	1/4	3/16	16 m (each)
170B1PS040000TMNYCX	4	60	4 l incl. level switch	230 VAC 50/60 Hz	1/4	3/16	32 m (each)
170B1PS080000TMNYCX	8	60	4 l incl. level switch	230 VAC 50/60 Hz	1/4	3/16	64 m (each)
170D1PS020000HMNYCX	2	15	4 l incl. level switch	24 VDC	1/4	3/16	16 m (each)
170D1PS040000HMNYCX	4	15	4 l incl. level switch	24 VDC	1/4	3/16	32 m (each)
170D1PS080000HMNYCX	8	15	4 l incl. level switch	24 VDC	1/4	3/16	64 m (each)
170D1PS020000TMNYCX	2	60	4 l incl. level switch	24 VDC	1/4	3/16	16 m (each)
170D1PS040000TMNYCX	4	60	4 l incl. level switch	24 VDC	1/4	3/16	32 m (each)
170D1PS080000TMNYCX	8	60	4 l incl. level switch	24 VDC	1/4	3/16	64 m (each)

ORSCO Series 170 assembly for pulsed spraying

Order number	Number of outlets	Metering quantity (mm^3/stroke)	Reservoir	Operating voltage	Air tube Ø mm	Oil tube Ø mm	Tubing included
170A1PS020000HMMPPX	2	15	4 l incl. level switch	115 VAC 50/60 Hz	6	4	16 m (each)
170A1PS040000HMMPPX	4	15	4 l incl. level switch	115 VAC 50/60 Hz	6	4	32 m (each)
170A1PS080000HMMPPX	8	15	4 l incl. level switch	115 VAC 50/60 Hz	6	4	64 m (each)
170A1PS020000TMMPPX	2	60	4 l incl. level switch	115 VAC 50/60 Hz	6	4	16 m (each)
170A1PS040000TMMPPX	4	60	4 l incl. level switch	115 VAC 50/60 Hz	6	4	32 m (each)
170A1PS080000TMNYPX	8	60	4 l incl. level switch	115 VAC 50/60 Hz	6	4	64 m (each)
170B1PS020000HMMPPX	2	15	4 l incl. level switch	230 VAC 50/60 Hz	6	4	16 m (each)
170B1PS040000HMMPPX	4	15	4 l incl. level switch	230 VAC 50/60 Hz	6	4	32 m (each)
170B1PS080000HMMPPX	8	15	4 l incl. level switch	230 VAC 50/60 Hz	6	4	64 m (each)
170B1PS020000TMMPPX	2	60	4 l incl. level switch	230 VAC 50/60 Hz	6	4	16 m (each)
170B1PS040000TMMPPX	4	60	4 l incl. level switch	230 VAC 50/60 Hz	6	4	32 m (each)
170B1PS080000TMMPPX	8	60	4 l incl. level switch	230 VAC 50/60 Hz	6	4	64 m (each)
170D1PS020000HMMPPX	2	15	4 l incl. level switch	24 VDC	6	4	16 m (each)
170D1PS040000HMMPPX	4	15	4 l incl. level switch	24 VDC	6	4	32 m (each)
170D1PS080000HMMPPX	8	15	4 l incl. level switch	24 VDC	6	4	64 m (each)
170D1PS020000TMMPPX	2	60	4 l incl. level switch	24 VDC	6	4	16 m (each)
170D1PS040000TMMPPX	4	60	4 l incl. level switch	24 VDC	6	4	32 m (each)
170D1PS080000TMMPPX	8	60	4 l incl. level switch	24 VDC	6	4	64 m (each)

Nozzles

Order number	Description	Air tube Ø	Oil tube Ø
SWN-IL-NY-00-2	straight, in-line, 2 in. tip nozzle	1/4 in.	3/16 in.
SWN-LP-NY-00-2	straight, low-profile, 2 in. tip nozzle	1/4 in.	3/16 in.
TPN-IL-MP-00-2	straight, in-line 2 in. tip nozzle	6 mm	4 mm
TPN-LP-MP-00-2	straight, low-profile 2 in. tip nozzle	6 mm	4 mm

Supports and proximity switch

Order number	Description
250-10316	mounting bracket for SWN-IL-NY-00-2 nozzle
250-10136	mounting bracket for SWN-LP-NY-00-2 nozzle
250-06319	mounting bracket for TPN nozzles
UCDE01-DPI-SC	inductive proximity switch incl. 5 m cable + fixing support



Grease injection lubrication systems

Precise and reliable grease lubrication systems for heavy duty roller chains and engineered chains

Automatic grease injection systems are designed for heavy-duty engineered chains operating under extreme loads and harsh conditions. These systems deliver precise amounts of grease directly to critical chain components, ensuring optimal lubrication and protection against wear, contamination, and corrosion. By automating the process, they improve reliability, extend chain life, and reduce maintenance downtime in demanding industrial environments.

Advantages:

- Superior load protection
- Enhanced wear resistance
- Excellent sealing effect
- Longer lubrication intervals
- Adaptability for severe conditions

Limitations:

- Higher initial cost
- Chain speed limits
- Customized solutions
- Complex installation and system setup



GIS-B

- Automatic system
- Electro-pneumatically operated
- Number of chains: 1 or 2
- Grease application: injector
- Advanced system control

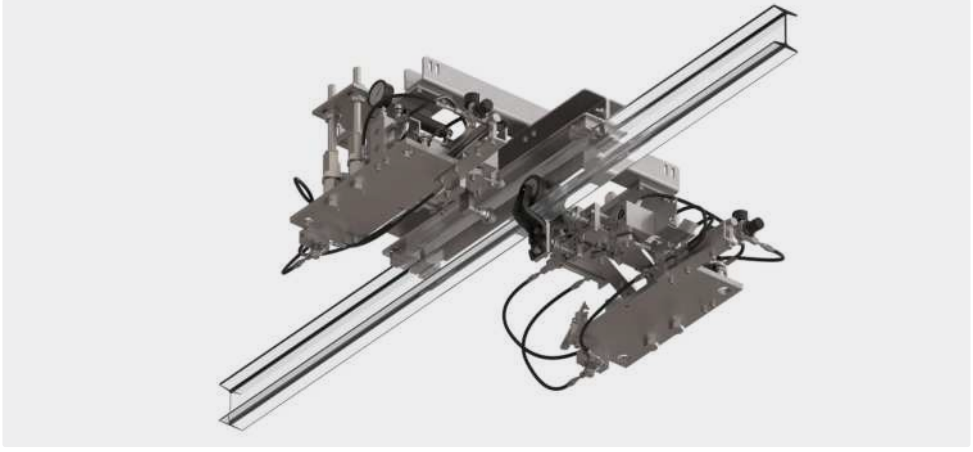

GIS-C

- Automatic system
- Air operated
- Number of chains: 2
- Grease application: injector
- Manual activation

Chain lubrication system GIS-B (GVP)

Engineered, air operated grease injection system for 1 or 2 engineered chains and forged chain trolleys



Features

- Highly precise automatic grease injection system for up to 2 engineered chains
- Low level of lubricant consumption compared to manual lubrication

Benefits

- Compact unit, reliable operation
- Cost saving solution

Suitable for chains

- Engineered chains, low speed
- Overhead conveyor chains

Description

The grease injection lubrication system GIS-B for engineered chains is an electro-pneumatically operated, automated lubrication unit designed for conveyor chains. It consists of two grease injectors mounted on carriages that move in parallel with the chain during lubrication. Each injector is equipped with a pneumatic cylinder for forward and return strokes, enabling precise contact with lubrication points. The system is supplied with lubricant via SKF MPB barrel pumps equipped with a valve set assembly, ensuring continuous and controlled grease delivery from large-volume barrels. Air and lubricant supply are regulated through pressure control units. The injection process is managed by the SKF standard control cabinet for grease injection systems, which synchronizes injector movements and injection cycles based on proximity sensors detecting chain rollers. The GIS-B system can be adapted to numerous chain speeds and different configurations of conveyor systems and roller positions.

Technical data

Function principle	electro-pneumatically operated grease injection system with barrel pump and controller cabinet	
Grease application method	injection	
Air actuation pressure	5 to 7 bar	*72 to 100 psi*
Lubricant	grease up to NLGI 2	
Operating temperature	5 to 45 °C	*40 to 113 °F*
Lubricant pressure		
Pump outlet	adjust the air pressure in order to get a lubricant pressure of 150 bar	
Injector	15 to 20 bar	*217 to 290 psi*
Number of outlets	1–2	
Metering quantity/outlet *	0.37 to 1 cm^3	
Mounting position	upright	

* The metering quantities depending on oil viscosity and system pressure and may therefore slightly varying.

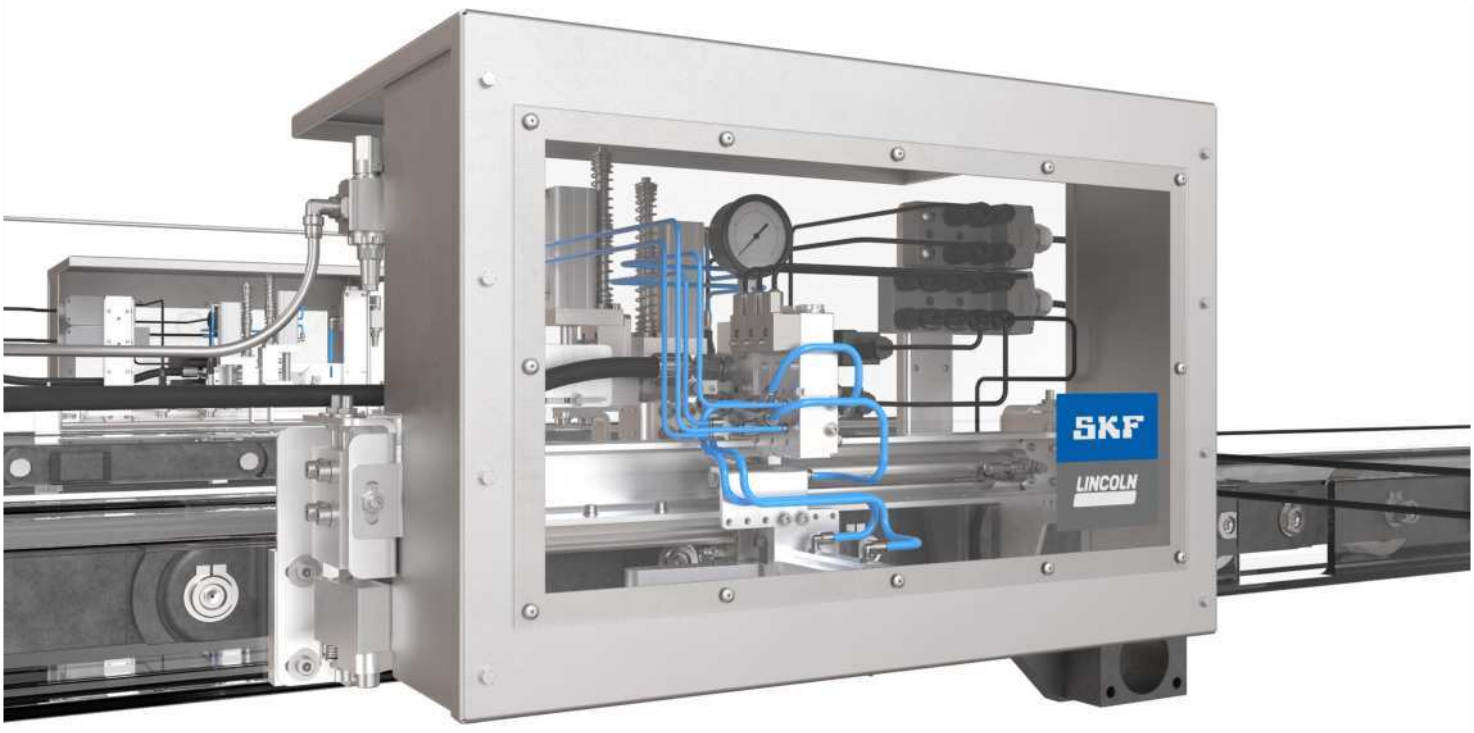

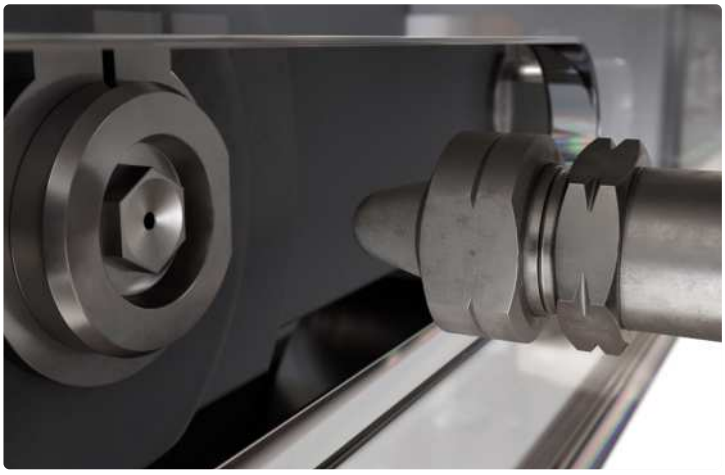





Engineered chains also require engineered lubrication solutions

Engineered chains require lubrication systems tailored to their demanding conditions. These solutions deliver precise amounts of lubricant to critical wear points, reducing friction and extending service life, while automated features like pressure control and monitoring help prevent downtime and failures. GIS systems are always customer-specific, so please contact SKF or its distribution partners for details - we look forward to supporting you.

Chain lubrication system GIS-C (Cobra)

Engineered mechanically operated grease injection system for 1–2 engineered chains

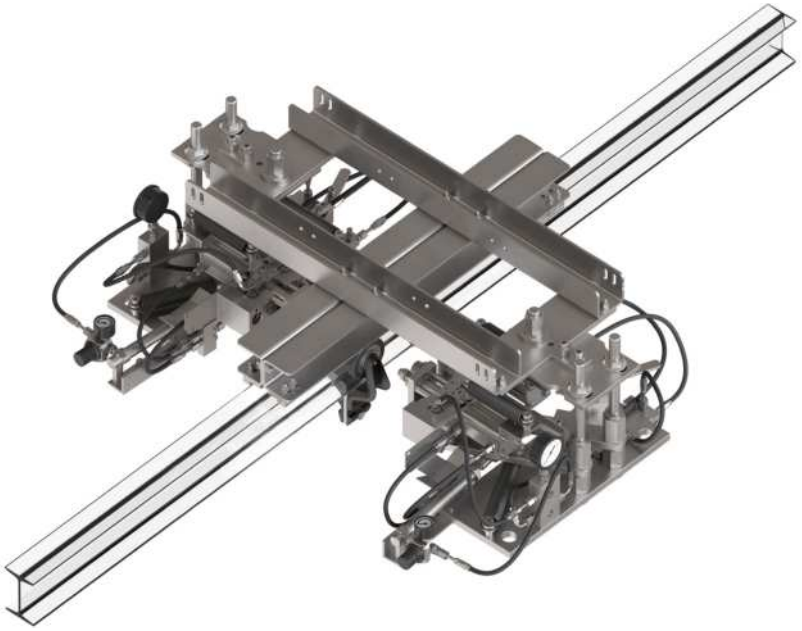

Features

- Highly precise automatic grease injection system for up to 2 engineered chains
- Low level of lubricant consumption compared to manual lubrication

Benefits

- Compact unit, reliable operation
- Cost saving solution

Suitable for chains

- Engineered chains, low speed
- Overhead conveyor chains

Description

The GIS-C chain lubrication system is a pneumatically operated grease injection solution for heavy-duty conveyor chains in harsh industrial environments. It consists of two grease injectors mounted on carriages that move in parallel with the chain during lubrication. The system is compatible with standard industrial greases up to NLGI grade 2, including those formulated for high-temperature and water-resistant applications. Its robust design supports manual activation as standard, with options for automated control and monitoring, providing consistent lubrication, reduced wear, and help to improve safety compared to manual greasing. The GIS-C system can be adapted to numerous chain speeds and different configurations of conveyor systems and roller positions.

Technical data

Function principle	air operated grease injection system with barrel pump	
Grease application method	injection	
Air actuation pressure	4 to 6 bar	*58 to 87 psi*
Lubricant	grease up to NLGI 2	
Operating temperature	5 to 60 °C	*40 to 140 °F*
Operating pressure	150 bar	*2 175 psi*
Number of outlets	1–2	
Metering quantity/outlet *	0.2 to 1.0 cm^3	
Metering frequency	up to 1 Hz	
Mounting position	upright	

* The metering quantities depending on oil viscosity and system pressure and may therefore slightly varying.

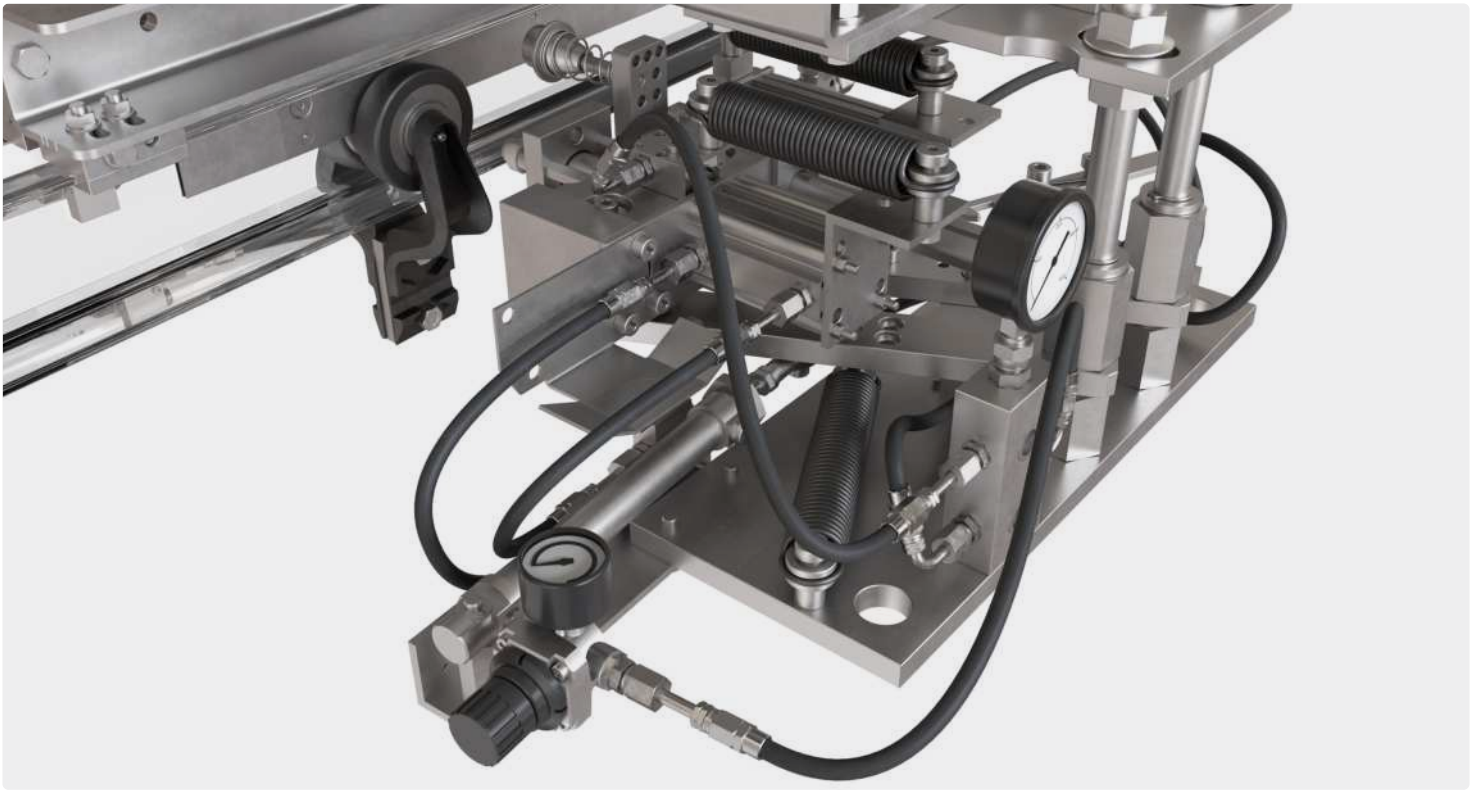



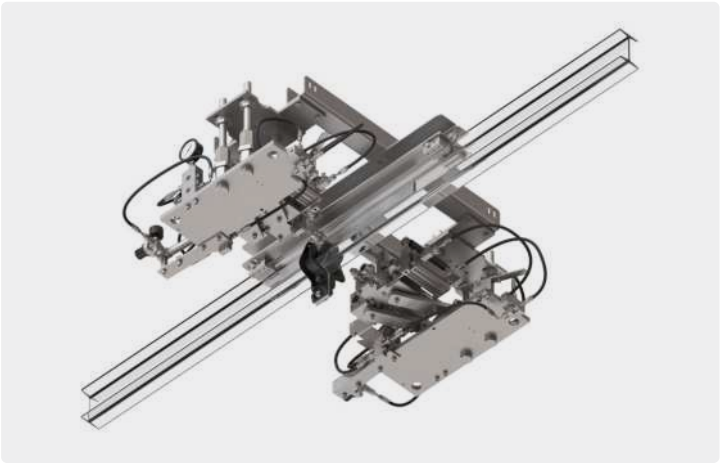



A customized and well engineered lubrication solution

Engineered heavy-duty chains in industrial applications are designed to withstand extreme loads, harsh environments, and continuous operation, making them highly complex systems with precise tolerances and specialized materials. These demanding conditions create significant friction and wear challenges, which cannot be addressed by conventional lubricants.

Engineered lubrication solutions are essential to help to ensure optimal performance, reduce downtime, and extend chain life by delivering tailored protection against corrosion, high temperatures, and contamination. Please contact SKF or its distribution partners for details - we look forward to supporting you.



Accessories

A chain is only as strong as its weakest link – also lubrication systems require high-quality accessories to perform optimally

Efficient chain lubrication depends on more than just the right lubricant; it requires a complete system of well-designed accessories to ensure precise application and reliable operation. Brushes, nozzles, plastic tubes, and hoses play a vital role in delivering lubricant exactly where it is needed, minimizing waste and reducing wear.

Controllers provide accurate dosing and timing, while premium chain oils guarantee optimal protection against friction and elongation. Together, these components form an integrated solution that maximizes chain performance and extends chain service life.



Tubes

- Plastic tubes
- 4-8 mm outer diameter



Brushes

- Extreme temp. brushes



Fittings and fixing material

- Tapered sleeve fittings
- Cutting sleeve fittings
- Tube fixing material



Nozzles

- Extreme temp. nozzles



Controllers

- LMC2
- LMC301
- CHL-CC



Reservoirs

- 3.3 to 36 l reservoir size
- Filling level monitoring



Chain oils

- LHMT 68
- LHHT 250
- LFFM 100
- LFFT 220

Brushes and supports

Special lubrication brushes for demanding applications



Features

- Wide temperature ranges
- Wide material range

Benefits

- Suitable for low to very high temperature applications

Suitable for chains

- Roller chains

Single brushes for chain lubrication systems

Order number	Designation	Shape	Shape size	Tube Ø	Temperature		Material	Fixation
992-000-289	Brush	Circle	Ø15 mm	M10x1	0 to +70°C	50 to 140 °F	Polyamide	M10x1
233-13651-1	OIL BRUSH MS L=CA 47MM R1/8	Circle	Ø20 mm	R 1/8	10 to 200 °C	*50 to 392 °F*	Brass	Ø20 mm
233-14419-1	OIL BRUSH BZ MODEL SPF 57 G 1/8	Rectangle	55×16 mm	G 1/8	10 to 200 °C	*50 to 392 °F*	Brass	2×Ø5,5 mm
233-13651-9	OIL BRUSH V2A MODEL SPR25/45/70 G 1/8	Circle	Ø25 mm	G 1/8	10 to 200 °C	*50 to 392 °F*	Brass	G 1/8

Brush kit sets for chain lubrication systems

Order number	Designation	Shape	Shape size	Tube Ø	Temperature		Material	Fixation
196-000-070	Brush, COMPL.	Circle	Ø15 mm	6mm	0 to +70°C	*50 to 140 °F*	Polyamide	M10x1
6770-02505-3	BRUSH ASSEMBLY SET (D9)	Circle	Ø9 mm	4 mm	0 to +70°C	*32 to 158 °F*	Polyamide 6.6	Ø25 mm
6770-02506-3	BRUSH ASSEMBLY SET (D25)	Circle	Ø25 mm	4 mm	0 to +70°C	*32 to 158 °F*	Polyamide 6.6	Ø25 mm
UC-1066-03	OIL BRUSH BRISTLE, D30	Circle	Ø30 mm	4 mm	10 to 60 °C	*50 to 140 °F*	Bristle	Ø19 mm
UC-1066-01	OIL BRUSH BRISTLE, 55x16	Rectangle	55×16 mm	4 mm	10 to 60 °C	*50 to 140 °F*	Bristle	Ø8,5 mm
AC.1447	OIL BRUSH	Circle	Ø30 mm	4mm	0 to +70°C	*50 to 140 °F*	Polyamide	G 3/8
233-13651-6	OIL BRUSH V2A MODEL SPR16/30/53 G 1/8	Circle	Ø16 mm	G 1/8	10 to 200 °C	*50 to 392 °F*	Stainless steel	Ø20 mm
UC-1066-05	OIL BRUSH PA6, D15	Circle	Ø15 mm	4 mm	10 to 80 °C	*50 to 176 °F*	Polyamide 6.6	Ø12,5 mm
UC-1066-06	OIL BRUSH PA6, 55x16	Rectangle	55×16 mm	4 mm	10 to 80 °C	*50 to 176 °F*	Polyamide 6.6	Ø12,5 mm
AC.1448.N	OIL BRUSH	Circle	Ø15 mm	4mm	0 to +70°C	*50 to 140 °F*	Polyamide	M12x1

Supports for brushes

Order number	Designation	Suitable for brush	Temperature		Material
6770-02507-3	BRUSH MOUNTING SET	6770-...	0 to +70°C	*32 to 158 °F*	Steel
AC-2879	SUPPORT FOR BRUSH	UC-1066-01, -02, -06, -14	10 to 80 °C	*50 to 176 °F*	Steel
AC-3398	SUPPORT FOR BRUSH	UC-1066-04, -05, -10	10 to 80 °C	*50 to 176 °F*	Steel
UC.1010.100	SUPPORT FOR BRUSH	UC-1066-03	10 to 80 °C	*50 to 176 °F*	Steel

Brushes and supports

992-000-289

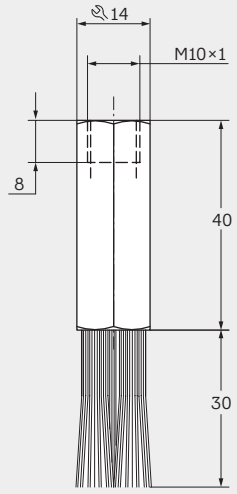

233-13651-1

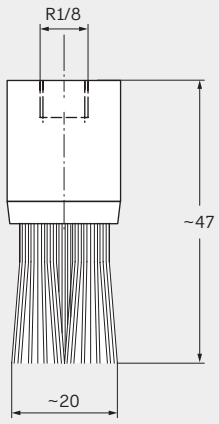

233-14419-1

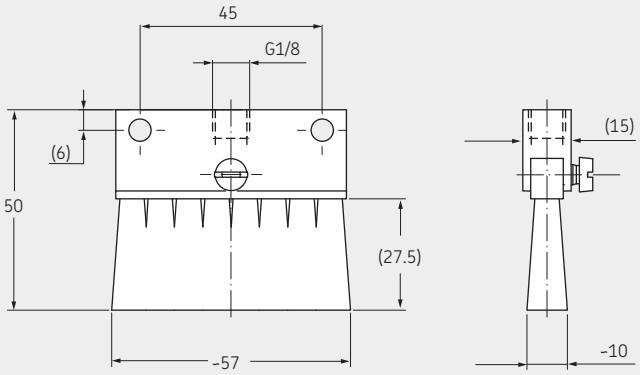

233-13651-9

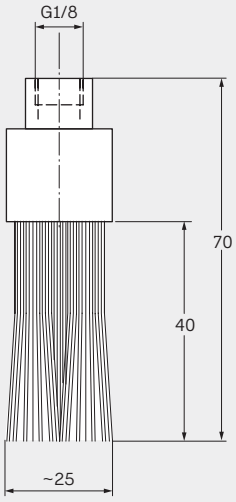

AC-2879

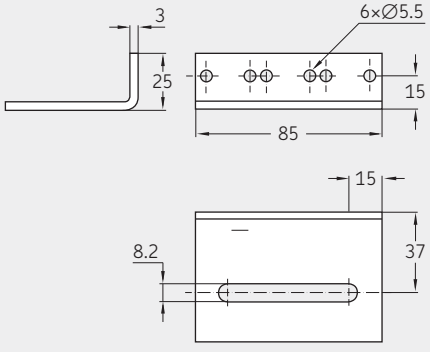

AC-3398

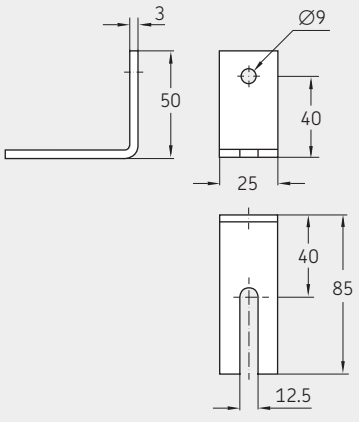

UC.1010.100

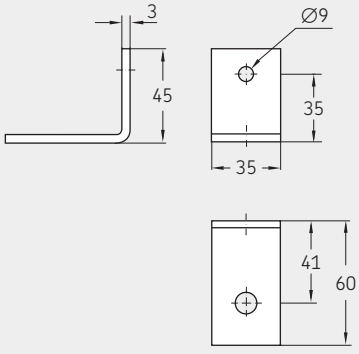

Nozzles and supports

Lubrication nozzles for demanding applications



Features

- Wide range of materials
- Compact and robust design

Benefits

- Reliable solutions
- Virtually maintenance free
- Suitable for extreme-temperatures

Suitable for chains

- Roller chains
- Engineered chains

Nozzles

Order number	Designation	Metering quantity	Number of outlets	Outlet ∅	Tube ∅	Temperature	Seal material	Fixation
AC-A-410	PROJECTION NOZZLE-1OUTØ0,5-M8-S.STEEL	10–60 mm³/stoke	1	0.5 mm	4 mm	-25 to +220 °C	FPM	M8×1.25
AC-A-420	PROJECTION NOZZLE-2OUTØ0,5-M8x1-S.STEEL	10–60 mm³/stoke	2	0.5 mm	4 mm	-25 to +200 °C	FPM	Ø8.5 mm
615-28660-3	OIL SPRAY NOZZLE SZDY-03	10–60 mm³/stoke	1	0.5 mm	6 mm	-25 to +120 °C	NBR	–

Supports for nozzles

Order number	Designation	Suitable for brush	Temperature		Material
AC-2879	SUPPORT FOR NOZZLES	AC-A...	10 to 80 °C	*50 to 176 °F*	Steel
UC-1065	SUPPORT FOR NOZZLES	AC-A...	10 to 80 °C	*50 to 176 °F*	Steel

Nozzles and supports

AC-A-410

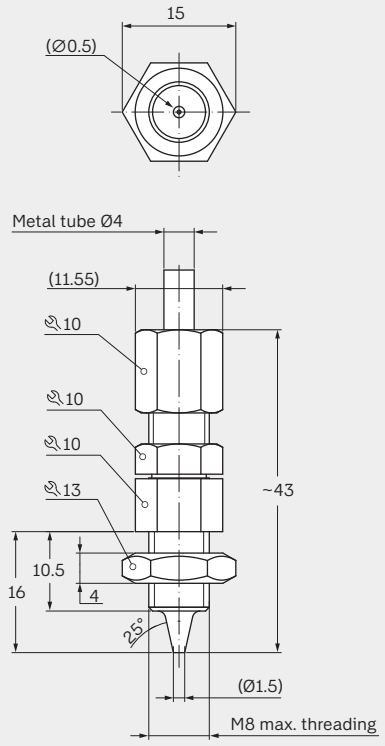

AC-A-420

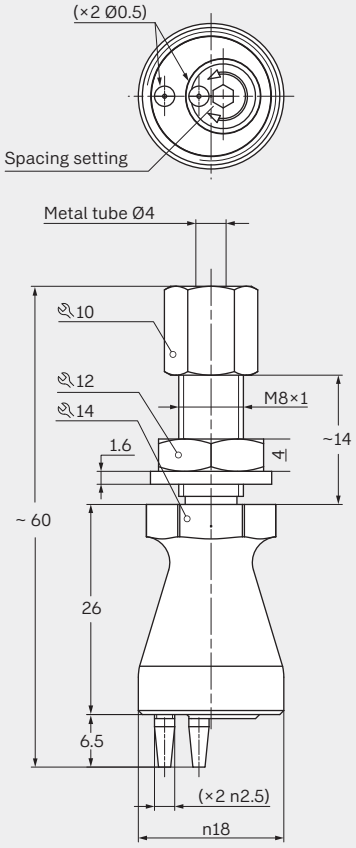

615-28660-3

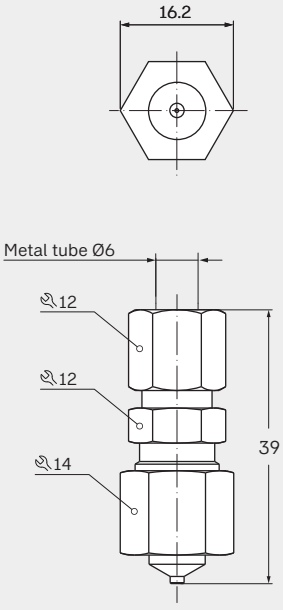

AC-2879

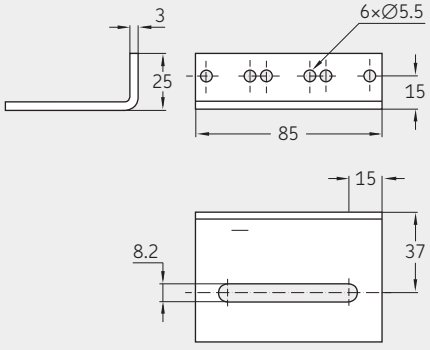

UC-1065

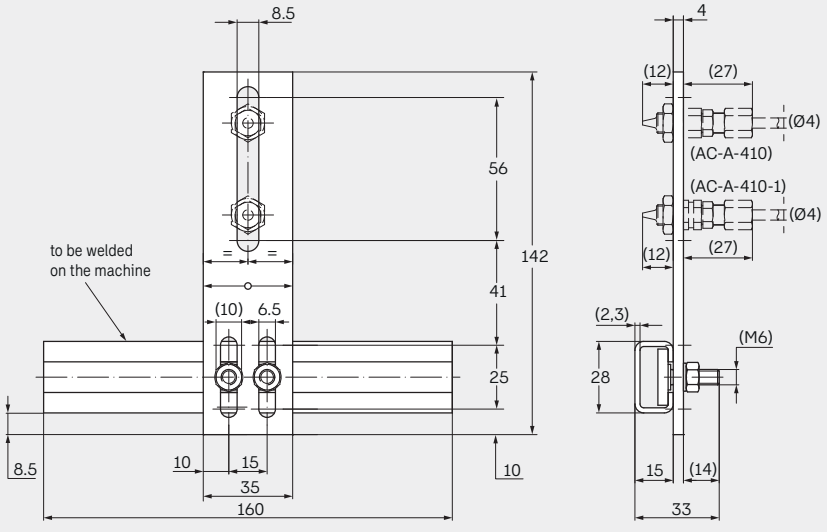

Reservoirs

Oil reservoirs for chain lubrication applications



Features

- Individually tested containers
- With fill level monitoring and filling strainer
- Wide range of oil capacities

Benefits

- Market-proven solution for leakage-free storage of oil
- Easy and quick to install

Reservoirs

Order number	Designation	Reservoir capacity		Fill level monitoring	Seal material	Weight	
KW3-S1	OIL RESERVOIR ASSY PL 3YL (SPDT)	3 l	*0.79 gal*	Min. filling level (Changeover)	NBR	1.63 kg	*3.59 lb*
TK-350-VMC	OIL RESERVOIR ASSY PL 3,3L	3.3 l	*0.87 gal*	Min. filling level (NC)	NBR	1.13 kg	*2.49 lb*
6770-02503-3	OIL RESERVOIR ASSEMBLY (+Fittings and hoses)	5 l	*1.32 gal*	–	–	2.20 kg	*4.85 lb*
KW6-S1	OIL RESERVOIR ASSY PL 6YL (SPDT)	6 l	*1.58 gal*	Min. filling level (Changeover)	NBR	2.58 kg	*5.70lb*
651-28691-1	OIL RESERVOIR PL 13YL F PMA	13 l	*2.86 gal*	Min. filling level (Changeover)	–	2.20 kg	*4.85 lb*
651-28685-1	OIL RESERVOIR PL 36YL F PMA	36 l	*7.9 gal*	Min. filling level (Changeover)	–	4.25 kg	*9.37 lb*

Oil trough with shut-off valve

Order number	Designation	Reservoir capacity		Dimensions L	B	H
B3 U21	OIL TROUGH 3L	3 l	*0.79 gal*	350	280	140
B7 U271	OIL TROUGH 6L	6 l	*1.58 gal*	400	380	190

Reservoirs

KW3-S1

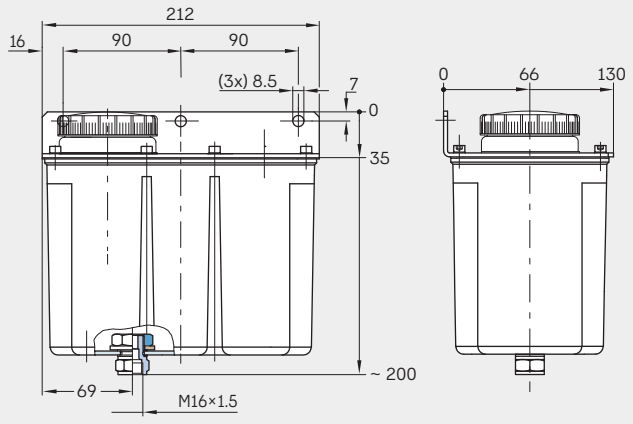

KW6-S1

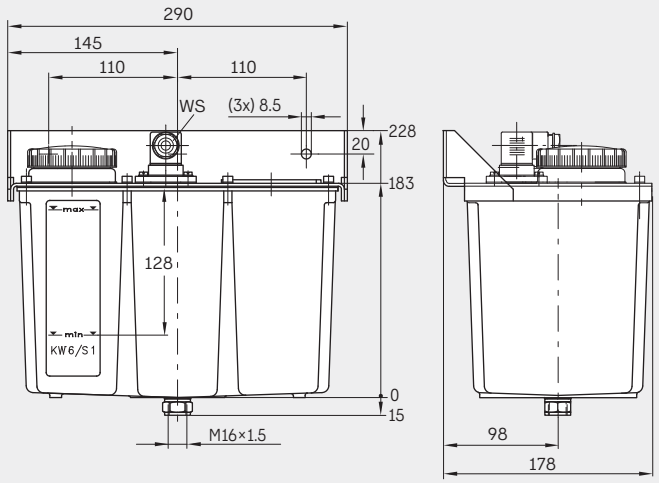

TK-350-VCM

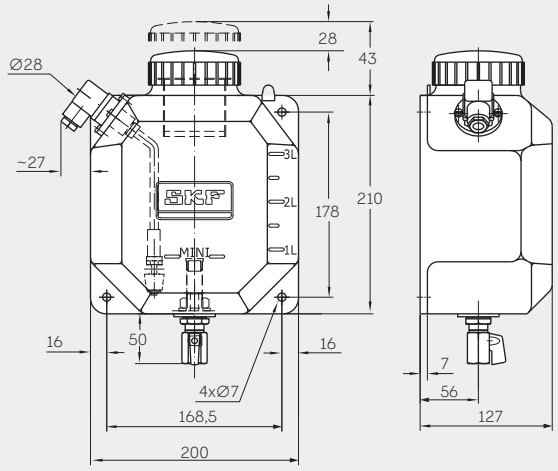

6770-02503-3

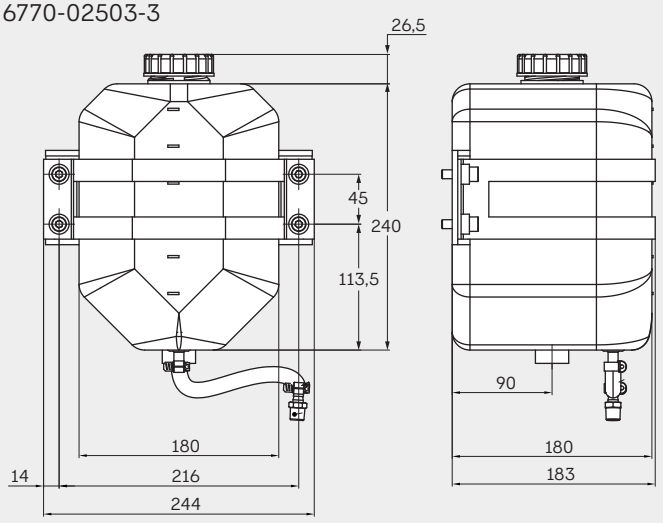

651-28691-1

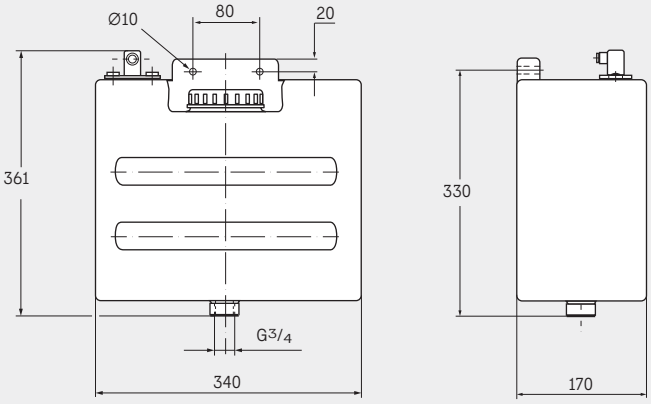

651-28685-1

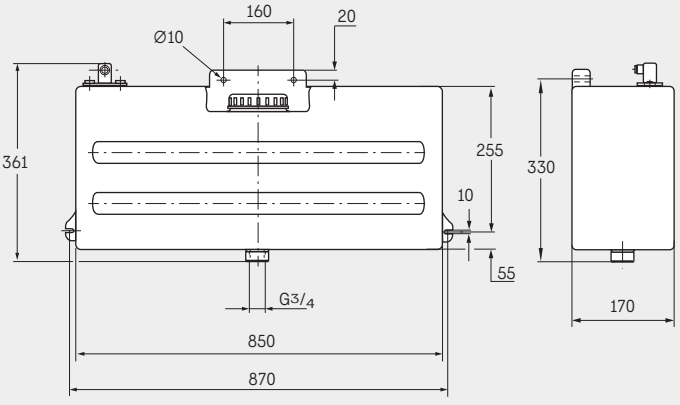

Plastic tubes

Customized plastic tubes for your application



Plastic tube T

Tailored SKF plastic tubes are configurable tubes in custom lengths optionally available prefilled with standard greases for quick and easy mounting. They come in nominal diameters from 2 to 10 mm and optionally also with hose protection and customer-specific markings as hose label, printing or with clips. Configuration takes place via SKF online tube configurator or via SKF parts library app.

Online configurator

The SKF tube configurator is an online tool for customizing plastic tubes used in chain lubrication systems. Users can choose tube length, diameter, and optional features like protections or custom markings. It simplifies ordering by generating order numbers and providing CAD data for easy integration into design workflows.

Features

- Custom tube lengths for quick and easy installation
- Easy online configuration
- Automatically created order numbers and CAD data download
- Customized tube end markings
- Optionally with tube protection
- Imprints for easy identification

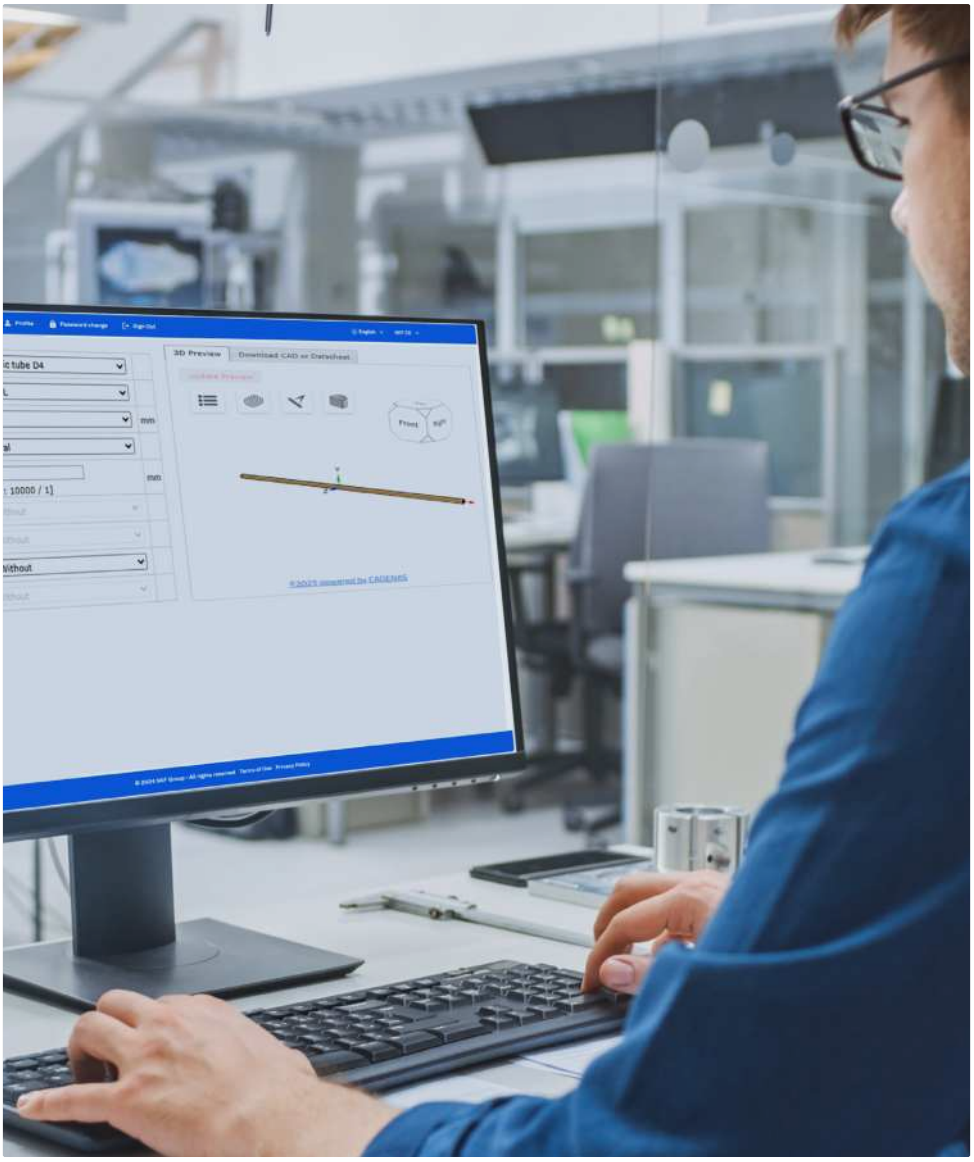

Fittings, metal pipes and fixing material

For connections that last
a whole service life



Tapered sleeve fittings

Tapered sleeve fittings are solderless pipe unions for low-pressure lubrication systems, providing leak-resistant connections for oil, fluid grease, and grease lines. They consist of a socket union, tapered sleeve, and reinforcing socket for plastic pipes or a double-cone sleeve for metal pipes, assembled according to DIN standards. Their design ensures simple installation, reliable sealing, and suitability for various industrial applications such as packaging machinery and automation systems.



Cutting sleeve fittings

Cutting sleeve fittings are solderless pipe unions designed for high-pressure lubrication systems (up to approx. 250 bar). They consist of a union nut, a cutting sleeve, and a fitting body, where the sleeve cuts into the pipe during assembly to create a secure, leak-proof metal-to-metal seal. This design ensures reliable performance under vibration and dynamic loads, making them ideal for automated lubrication systems in demanding environments such as conveyor chains and industrial machinery.



Metal pipes

SKF offers a comprehensive range of precision steel and stainless steel pipes for automatic lubrication systems. The steel pipes are seamless, galvanized, and available in various diameters and wall thicknesses, while the stainless steel options are ideal for aggressive environments requiring high corrosion resistance. Both types ensure reliable, long-term lubricant transfer and are suitable for demanding industrial applications across multiple sectors.



Tube fixing material

SKF fixing materials are designed to securely mount and stabilize lubrication system components, ensuring reliable operation under varying loads and vibrations. They include brackets, clamps, washers, screws, and other fastening elements made from durable materials to withstand mechanical stress and environmental conditions. These components provide precise alignment and robust support for pipes, hoses, and fittings in centralized lubrication systems, contributing to leak-free connections and long service life.

Controllers

Full chain lubrication system control and connectivity



LMC 2

The LMC 2 is a controller for the electronic management and monitoring of lubrication systems. It combines the advantages of a specially developed printed circuit board (PCB) and a PLC in an economical, compact unit. The desired application can be selected by a dip switch. Parameters can be set by using the menu and keypad. Special set-up configurations are also available on request. Two basic models are available (24 V DC and 230 V AC). The unit is mounted in its own IP54 enclosure and does not need to be integrated in a control cabinet. Besides time dependent intervals, an integrated counter also facilitates a cycle-dependent control of the lubrication intervals. The LMC2 can be integrated into common field bus systems via procedure-neutral interfaces.



LMC 301

The SKF LMC 301 is a compact, modular control and monitoring unit. It enables precise control of up to three lubrication pumps, each managing up to three zones, for a total of nine lubrication circuits. The controller features an LCD display with six function keys for easy programming and diagnostics, supported by PC software for advanced parameter setting. Key capabilities include time- or pressure-based lubrication cycles, monitoring via pressure switches and transducers, and integration with sensors to verify lubricant delivery. The system offers 10 digital inputs (two analog) and 8 relay outputs, expandable with up to seven I/O modules for complex installations. Designed for harsh environments, the LMC 301 is IP65-rated, operates on 24 V DC or 100–240 V AC, and supports multilingual interfaces.



CHL-CC

The CHL-CC (Chain lubrication - controller cabinet) is a forward-thinking, highly advanced control unit for automatic chain lubrication systems. It features a user-friendly touch display for comprehensive monitoring and control of all critical parameters to ensure optimal performance and reliability of sophisticated and complex chain lubrication systems.
The CHL-CC can monitor, evaluate, communicate, and convert all desired sensor and system signals into control impulses. Interfaces such as PROFINET, OPC UA, S7 communication, and MODBUS TCP/IP enable easy integration into the main control system of machines and plants, into custom cloud solutions, or, if desired, into the SKF Lubrication Cloud.



AEP3

The AEP3 control unit is specifically designed to manage the SKF GIS-B chain lubrication system, ensuring precise and automated lubrication of conveyor chains without production interruptions. It controls up to four lubrication cycles, monitors mechanical, hydraulic, and pneumatic functions, and provides real-time fault diagnostics via its multilingual touchscreen interface. With adjustable lubrication parameters and optional Fieldbus connectivity, AEP3 delivers reliable performance for demanding industrial environments.

Chain oils and oil handling containers

Lubricating oils and oil-handling tools that make maintenance fun



LHMT 68

SKF LHMT 68 is a high-performance mineral chain oil for medium-temperature chains. It provides strong anti-wear and anti-corrosion protection, extending chain life and reducing maintenance. With ISO VG 68 viscosity, it penetrates effectively and forms a light lubricating film, ideal for conveyor, drive, and lift chains. Operating range is –20 °C to +100 °C, with a flash point above 200 °C and no silicone. Available in 5-liter cans or refill cartridges for automatic lubricators, it offers flexible lubrication solutions.



LHHT 250

SKF LHHT 250 is a synthetic ester-based chain oil for extreme conditions, ensuring reliable lubrication at high temperatures and heavy loads. It offers excellent anti-wear and corrosion protection, reduces friction, and extends chain life while minimizing relubrication. LHHT 250 performs up to 250 °C, stays virtually residue-free, and provides outstanding oxidation stability - ideal for conveyor, drive, and lift chains in demanding environments. Available in 5-liter cans or cartridges for automatic lubricators, it supports flexible solutions.



LFFM 100

SKF LFFM 100 is a synthetic chain oil for food and pharmaceutical applications. Certified NSF H1, ISO 21469, Halal, and Kosher, it meets strict hygiene standards while providing excellent anti-wear and corrosion protection. With ISO VG 100 viscosity, it performs in moist, low-temperature environments (–30 °C to +130 °C), offering high oxidation stability and minimal residue. LFFM 100 extends chain life, reduces relubrication, and lowers oil consumption—ideal for conveyor, drive, and lift chains in food-grade operations.



LFFT 220

SKF LFFT 220 is a synthetic ester-based chain oil for food and pharmaceutical use under high temperatures and heavy loads. Certified NSF H1, ISO 21469, Halal, and Kosher, it ensures hygiene compliance while providing anti-wear, corrosion resistance, and oxidation stability. With ISO VG 220 viscosity, it works up to 250 °C, leaves almost no residue, and supports long relubrication intervals to cut maintenance and oil use. Ideal for conveyor, drive, and lift chains in heat-intensive environments, it comes in 5-liter cans or cartridges.



LAOS

The SKF LAOS series offers a comprehensive range of oil handling containers designed for safe, clean, and efficient lubrication. These containers include durable drums and color-coded lids for easy identification, helping prevent cross-contamination. Features such as quick-closing spouts, vacuum valves, and heat- and chemical-resistant materials ensure precise oil dispensing and minimize spillage. Available in multiple sizes and configurations, LAOS containers improve workplace safety and streamline oil storage and handling processes.

Index

105-35251-1 37
170A1PS020000HMMPPX 47
170A1PS020000HMNYCX 47
170A1PS020000TMMPPX 47
170A1PS020000TMNYCX 47
170A1PS040000HMMPPX 47
170A1PS040000HMNYCX 47
170A1PS040000TMMPPX 47
170A1PS040000TMNYCX 47
170A1PS080000HMMPPX 47
170A1PS080000HMNYCX 47
170A1PS080000TMNYCX 47
170A1PS080000TMNYPX 47
170B1PS020000HMMPPX 47
170B1PS020000HMNYCX 47
170B1PS020000TMMPPX 47
170B1PS020000TMNYCX 47
170B1PS040000HMMPPX 47
170B1PS040000HMNYCX 47
170B1PS040000TMMPPX 47
170B1PS040000TMNYCX 47
170B1PS080000HMMPPX 47
170B1PS080000HMNYCX 47
170B1PS080000TMMPPX 47
170B1PS080000TMNYCX 47
170D1PS020000HMMPPX 47
170D1PS020000HMNYCX 47
170D1PS020000TMMPPX 47
170D1PS020000TMNYCX 47
170D1PS040000HMMPPX 47
170D1PS040000HMNYCX 47
170D1PS040000TMMPPX 47
170D1PS040000TMNYCX 47
170D1PS080000HMMPPX 47
170D1PS080000HMNYCX 47
170D1PS080000TMMPPX 47
170D1PS080000TMNYCX 47
196-000-070 56
231-900-028 21
231-900-028 41
231-900-028 43
231-900-028.U1 21
231-900-028.U1 41
231-900-028.U1 43
233-13651-1 56
233-13651-6 56
233-13651-9 56
233-14419-1 56
236–10567–5 21
236–10567–5 23
236–10567–5 27
236–10567–5 41
236–10567–5 43
236–10567–6 21
236–10567–6 23
236–10567–6 27
236–10567–6 41
236–10567–6 43
250-06319 45
250-06319 47
250-10136 45
250-10136 47
250-10316 45
250-10316 47
342-4VS-11000-TT 21
342-4VS-11000-TT 23
342-4VS-11000-TT 25
342-4VS-11000-TY 21
342-4VS-11000-TY 23
342-4VS-11000-TY 25
342-4VS-11000-UU 27
342-4VS-11000-UY 27
342-4VS-22000-TT 21
342-4VS-22000-TT 23
342-4VS-22000-TT 25
342-4VS-22000-TY 21
342-4VS-22000-TY 23
342-4VS-22000-TY 25
342-4VS-22000-UU 27
342-4VS-22000-UY 27
342-4VS-33000-TT 21
342-4VS-33000-TT 23
342-4VS-33000-TT 25
342-4VS-33000-TY 21
342-4VS-33000-TY 23
342-4VS-33000-TY 25
342-4VS-33000-UU 27
342-4VS-33000-UY 27
342-4VS-44000-TT 21
342-4VS-44000-TT 23
342-4VS-44000-TT 25
342-4VS-44000-TY 21
342-4VS-44000-TY 23
342-4VS-44000-TY 25
342-4VS-44000-UU 27
342-4VS-44000-UY 27
342-4VS-55000-TT 21
342-4VS-55000-TT 23
342-4VS-55000-TT 25
342-4VS-55000-TY 21
342-4VS-55000-TY 23
342-4VS-55000-TY 25
342-4VS-55000-UU 27
342-4VS-55000-UY 27
406-054-VS 25
408-413 27
552-32407-1 21
552-32407-1 23
552-32407-1 25
552-32407-1 27
552-33735-1 21
552-33735-1 23
552-33735-1 25
552-33735-1 27
615-28660-3 37
615-28660-3 58
651-28685-1 60
651-28691-1 60
982-120-040 37
982-120-040+500 33
982-120-041 37
982-120-041+500 33
982-120-061 37

992-000-289 56
6343-70000005 37
6343-70000007 37
6343-70000008 37
6343-70000009 37
6343-70000010 37
6343-70000011 37
6510-70000001 37
6510-70000002 37
6510-70000003 37
6510-70000004 37
6510-70000005 37
6510-70000006 37
6770-02503-3 60
6770-02505-3 56
6770-02506-3 56
6770-02507-3 56
6840-00000062 43
6840-00000063 43
6840-00000064 43
6840-00000065 43
6840-00000066 43
6840-00000067 43
6840-00000068 43
6840-00000069 43
7062-02003-4 21
7062-02003-4 23
7062-02003-4 25
7062-02003-4 27
7082-04093-4 21
7082-04093-4 23
7082-04093-4 25
7082-04093-4 27
7327-5000005 33
7327-5000006 33
7327-5000007 33
7327-5000008 33
7327-5000009 33
7327-5000010 33
7327-5000011 33
7327-5000012 33
7327-5000013 33
7327-5000014 33
7327-5000015 33
7327-5000016 33
12380200 29
12380210 29
12381703 29
12385304 29
12385995 29
12390350 29
12390400 29
12390450 29
12390500 29
12390550 29
12390600 29
12392520 29
12393500 29
12394440 29
12394441 29
12394550 29
12395360 29
12395365 29
12802500 29
12802520 29
12802522 29
AC.1447 56
AC.1448.N 56
AC-2879 56
AC-2879 58
AC-3184-C2 41
AC-3184-C2 43
AC-3398 56
AC-3539-C2 41
AC-3539-C2 43
AC-3657-C2 41
AC-3657-C2 43
AC-3659-C2 41
AC-3659-C2 43
AC-A-410 33
AC-A-410 37
AC-A-410 58
AC-A-420 58
ACP15-1WA1X1X-U10 21
ACP15-1WA1X1X-U17 21
ACP15-1WA11XX-U10 21
ACP15-1WA11XX-U17 21
ACP15-10A1X1X-U05 21
ACP15-10A11XX-U05 21
AEP3 64
B3 U21 60
B7 U271 60
CHL-CC 64
CLK-260R-100+428 35
CLK-260R-100+429 35
CLK-430R-101+428 35
CLK-430R-101+429 35
CLK-430R-121+428 35
CLK-430R-121+429 35
CLK-460R-100+428 35
CLK-460R-100+429 35
CLK-460R-110+428 35
CLK-460R-110+429 35
Cutting sleeve fittings 63
F12-C2-F1000 41
F12-C2-F1000 43
F12-C2-F2000 41
F12-C2-F2000 43
F12-C2-F3000 41
F12-C2-F3000 43
F12-C2-F4000 41
F12-C2-F4000 43
F12-C2-F5000 41
F12-C2-F5000 43
KW3-S1 60
KW6-S1 60
LAGD 125/FM100 17
LAGD 125/FT220 17
LAGD 125/HMT68 17
LAOS 65
LAPB 3x4E1 17
LAPB 3x7E1 17
LAPB 3x10E1 17

LAPC 13. 17
LAPC 50 17
LAPF F1/4. 17
LAPF M1/4 17
LAPT 1000 17
LFFM 100 65
LFFT 220 65
LHHT 250. 65
LHMT 68. 65
LMC 2 64
LMC 301 64
MCU2-G1-10-428. 23
MCU2-G1-10-924 23
MCU2-G1-11-428 23
MCU2-G1-11-924 23
MCU2-G2-10-428. 23
MCU2-G2-10-924. 23
MCU2-G2-11-428 23
MCU2-G2-11-924 23
Metal pipes 63
MFE5-BW7+299 27
MFE5-BW7-S22+1GD 27
MFE5-BW16+299. 27
MFE5-BW16-S145+1GD 27
MKU1-12CC10000+428 25
MKU1-12CC10000+429 25
MKU2-12CC10000+428. 25
MKU2-12CC10000+429. 25
MOD-031-NC. 43
MOD-1011. 41
MOD-1016+428 21
MOD-1016+428 21
MOD-1016+428 41
MOD-1016+924. 41
OCL-MK-0001300-3 19
OCL-MK-0031200-3 19
Plastic tube T 62
SWN-IL-NY-00-2. 45
SWN-IL-NY-00-2. 47
SWN-LP-NY-00-2. 45
SWN-LP-NY-00-2. 47
T04BCT05000XXXXXXX. 21
T04BCT05000XXXXXXX. 23
T04BCT05000XXXXXXX. 25
T04BCT05000XXXXXXX. 27
T04BCT20000XXXXXXX. 21
T04BCT20000XXXXXXX. 23
T04BCT20000XXXXXXX. 25
T04BCT20000XXXXXXX. 27
T06BET05000XXXXXXX. 21
T06BET05000XXXXXXX. 23
T06BET05000XXXXXXX. 25
T06BET20000XXXXXXX. 21
T06BET20000XXXXXXX. 23
T06BET20000XXXXXXX. 25
T08BET05000XXXXXXX. 27
T08BET20000XXXXXXX. 27
Tapered sleeve fittings. 63
TK-350-VMC 60
TPN-IL-MP-00-2 45
TPN-IL-MP-00-2 47
TPN-LP-MP-00-2 45
TPN-LP-MP-00-2 47
TU-2.2X3.2-RLN * 41
TU-2.2X3.2-RLN * 43
TU-5.5X8-PON 41
TU-5.5X8-PON 43
Tube fixing material 63
UC.1010.100. 56
UC-1065 58
UC-1066-01 56
UC-1066-03. 56
UC-1066-05. 56
UC-1066-06. 56
UCDE01-DPI-SC 33
UCDE01-DPI-SC 37
UCDE01-DPI-SC 45
UCDE01-DPI-SC 47
VE1B-PA1-10 41
VE1B-PA2-10 41
VE1B-PA3-10 41
VE1B-PA4-10 41
VSRASH2X1ILMPM 45
VSRASH2X1ILNYM 45
VSRASH4X1ILMPM 45
VSRASH4X1ILNYM 45
VSRASH8X1ILMPM 45
VSRASH8X1ILNYM 45
VSRAST2X1ILMPM. 45
VSRAST2X1ILNYM. 45
VSRAST4X1ILMPM. 45
VSRAST4X1ILNYM. 45
VSRAST8X1ILNYM. 45
VSRAST8X1ILNYM. 45
VSRBSH2X1ILMPM 45
VSRBSH2X1ILNYM 45
VSRBSH4X1ILMPM 45
VSRBSH4X1ILNYM 45
VSRBSH8X1ILMPM 45
VSRBSH8X1ILNYM 45
VSRBST2X1ILMPM. 45
VSRBST2X1ILNYM. 45
VSRBST4X1ILMPM. 45
VSRBST4X1ILNYM. 45
VSRBST8X1ILMPM. 45
VSRBST8X1ILNYM. 45
VSRDSH2X1ILMPM 45
VSRDSH2X1ILNYM 45
VSRDSH4X1ILMPM 45
VSRDSH4X1ILNYM 45
VSRDSH8X1ILNYM 45
VSRDSH8X1ILNYM 45
VSRDST2X1ILNYM. 45
VSRDST2X1ILNYM. 45
VSRDST4X1ILNYM. 45
VSRDST4X1ILNYM. 45
VSRDST8X1ILNYM. 45
VSRDST8X1ILNYM. 45

Notes

Notes

Notes

skf.com/lubrication

® SKF, LINCOLN and ORSCO are registered trademarks of AB SKF (publ).

© SKF Group 2026. All rights reserved. Please note that this publication may not be copied or distributed, in whole or in part, unless prior written permission is granted.

Every care has been taken to ensure the accuracy of the information contained in this publication, but no liability can be accepted for any loss or damage whether direct, indirect or consequential arising out of the use of the information contained herein.

PUB LS/P2 20271 EN · August 2026
Certain image(s) used under license from shutterstock.com